Customizable Fail-Safe multifunction technology actuator for controlling dampers in typical commercial HVAC applications.

- Actuating force motor 450 N [100 lbf]
- Nominal voltage AC/DC 24 V
- Control MFT/programmable
- Position feedback 2...10 V



Picture may differ from product

5-year warranty

Technical data

Electrical data	Nominal voltage	AC/DC 24 V
	Nominal voltage frequency	50/60 Hz
	Nominal voltage range	AC 19.2...28.8 V / DC 21.6...28.8 V
	Power consumption in operation	11 W
	Power consumption in rest position	3 W
	Transformer sizing	22 VA
	Electrical connection	18 AWG appliance or plenum cables, 1 m, 3 m or 5 m, with or without 1/2" NPT conduit connector
	Overload Protection	electronic throughout full stroke
	Electrical Protection	actuators are double insulated
Functional data	Actuating force motor	450 N [100 lbf]
	Operating range Y	2...10 V
	Operating range Y note	4...20 mA w/ ZG-R01 (500 Ω, 1/4 W resistor)
	Input impedance	100 kΩ for 2...10 V (0.1 mA), 500 Ω for 4...20 mA, 1500 Ω for PWM, On/Off and Floating point
	Operating range Y variable	Start point 0.5...30 V End point 2.5...32 V
	Operating modes optional	variable (VDC, on/off, floating point)
	Position feedback U	2...10 V
	Position feedback U note	Max. 0.5 mA
	Position feedback U variable	VDC variable
	Setting fail-safe position	adjustable with dial or tool 0...100% in 10% increments
	Bridging time (PF)	2 s
	Bridging time (PF) variable	0...10 s
	Pre-charging time	5...26 s
	Direction of motion motor	selectable with switch 0/1
	Direction of motion fail-safe	reversible with switch
	Manual override	external push button
	Stroke	4" [100 mm]
	Running Time (Motor)	150 s / 100 mm
	Running time motor variable	90...150 s

Technical data

Functional data	Running time fail-safe	<35 s
	Sound power level motor	52 dB(A)
	Sound power level, fail-safe	61 dB(A)
	Adaptation Setting Range	off (default)
	Override control	MIN (minimum position) = 0% MID (intermediate position) = 50% MAX (maximum position) = 100%
Safety data	Power source UL	Class 2 Supply
	Degree of protection NEMA/UL	NEMA 2
	Housing	UL Enclosure Type 2
	Agency Listing	cULus acc. to UL60730-1A/-2-14, CAN/CSA E60730-1:02, CE acc. to 2014/30/EU
	Quality Standard	ISO 9001
	UL 2043 Compliant	Suitable for use in air plenums per Section 300.22(C) of the NEC and Section 602 of the IMC
	Ambient humidity	Max. 95% RH, non-condensing
	Ambient temperature	-22...122°F [-30...50°C]
	Storage temperature	-40...176°F [-40...80°C]
	Servicing	maintenance-free
Weight	Weight	2.9 lb [1.3 kg]
Materials	Housing material	UL94-5VA

Footnotes

*Variable when configured with MFT options.

†Rated Impulse Voltage 800V, Type of action 1.AA, Control Pollution Degree 3

Product features

Default/Configuration

Default parameters for 2 to 10 VDC applications of the AHK..-MFT actuator are assigned during manufacturing. If required, custom versions of the actuator can be ordered. The parameters are variable and can be changed by three means: Factory pre-set or custom configuration, set by the customer using PC-Tool software or the handheld ZTH US.

Application

For fail-safe, modulating control of dampers in HVAC systems. Actuator sizing should be done in accordance with the damper manufacturer's specifications. A feedback signal is provided for position indication.

Product features

Operation

The AHKX24-MFT-100 provides a 4 inch linear stroke. The stroke of the gear rack can be adjusted on both sides in increments of 0.8 inches [20mm] with the mechanical end stops. When reaching the damper or actuator end position the actuator automatically stops. The gear can be manually disengaged by pressing the button located on the actuator cover. The AHKX24-MFT actuator uses a brushless DC motor controlled by an Application Specific Integrated Circuit (ASIC). The ASIC monitors and controls the actuator rotation and provides a digital rotation sensing (DRS) function to prevent damage to the actuator in a stall condition. Power consumption is reduced in a holding mode. The actuator is electronically protected against overload. The anti-rotation strap supplied with the actuator will prevent lateral movement.

Fail-Safe Indication

LED status indicator lights sequence:

Yellow off / Green on: operation ok, no faults

Yellow off / Green blinking: fail-safe mechanism is active

Yellow on / Green off: fault is detected

Yellow off / Green off: not in operation / capacitors charging

Yellow on / Green on: adaption running

Yellow blinking / Green on: communication with programming tool

Typical specification

Modulating control, electrical fail-safe damper actuators shall be electronic type with integrated linear stroking arm. Actuators must provide modulating control in response to a control input from an electronic controller or positioner. Actuators shall have brushless DC motor technology and be protected from overload at all angles of rotation. Actuators shall have reversing switch and manual override on the cover. Run time shall be constant and independent of torque. A 2 to 10 VDC feedback signal shall be provided for position feedback. Actuators shall be cULus listed, have a 5-year warranty, and be manufactured under ISO 9001 International Quality Control Standards. Actuators shall be as manufactured by Belimo.

Bridging time

Power failures can be bridged up to a maximum of 10 s.

In the event of a power failure, the actuator will remain stationary in accordance with the set bridging time. If the power failure is greater than the set bridging time, the actuator will move into the selected fail-safe position.

The bridging time set at the factory is 2 s. It can be modified on site in operation by means of the Belimo service tool MFT-P.

Settings: The rotary knob must not be set to the "PROG FAIL-SAFE" position!

For retroactive adjustments of the bridging time with the Belimo service tool MFT-P or with the ZTH EU adjustment and diagnostic device only the values need to be entered.

Factory settings

Default parameters for 2 to 10 VDC applications of the AHK..-MFT actuator are assigned during manufacturing. If required, custom versions of the actuator can be ordered. The parameters are variable and can be changed by three means: Factory pre-set or custom configuration, set by the customer using PC-Tool software or the handheld ZTH US.

Accessories

Tools

Description	Type
Service tool for wired and wireless setup, on-site operation and troubleshooting.	Belimo Assistant 2
Signal simulator, Power supply AC 120 V	PS-100
Connecting cable 16 ft [5 m], A: RJ11 6/4 LINK.10, B: 6-pin for connection to service socket	ZK1-GEN
Connecting cable 16 ft [5 m], A: RJ11 6/4 LINK.10, B: free wire end for connection to MP/PP terminal	ZK2-GEN
Connecting cable 10 ft [3 m], A: RJ11 6/4 LINK.10, B: 3-pin Weidmüller and supply connection	ZK4-GEN
Service tool, with ZIP-USB function, for configurable and communicative Belimo actuators, VAV controller and HVAC performance devices	ZTH US

Electrical accessories

Description	Type
	IRM-100

Accessories

	Description	Type
	Convert Pulse Width Modulated Signal to a 2...10 V Signal for Belimo Proportional Actuators	PTA-250
	Positioner for wall mounting	SGA24
	Positioner for front-panel mounting	SGF24
	Cable conduit connector 1/2"	TF-CC US
	Gateway MP to BACnet MS/TP	UK24BAC
	Gateway MP to LonWorks	UK24LON
	Gateway MP to Modbus RTU	UK24MOD
	Resistor, 500 Ω, 1/4" wire resistor with 6" pigtail wires	ZG-R01
	Resistor kit, 50% voltage divider	ZG-R02
	Transformer, AC 120 V to AC 24 V, 40 VA	ZG-X40
Mechanical accessories	**Description**	**Type**
	Ball joint suitable for damper crank arm KH8 / KH10	KG10A
	Ball joint suitable for damper crank arm KH8	KG6
	Ball joint suitable for damper crank arm KH8	KG8
		SH8
	Rotary support, for linear actuator, for compensation of transverse forces	Z-DS1
		Z-KSC
		ZG-119

Electrical installation

Wire colors:
1 = black
2 = red
3 = white
4 = pink
5 = orange

AC/DC 24 V, modulating

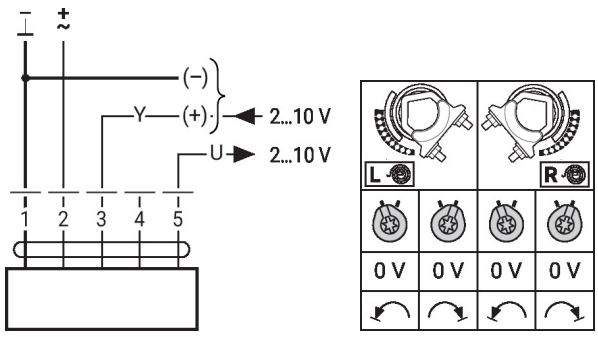

Wiring diagram piggy-back operation (mechanically coupled actuators)

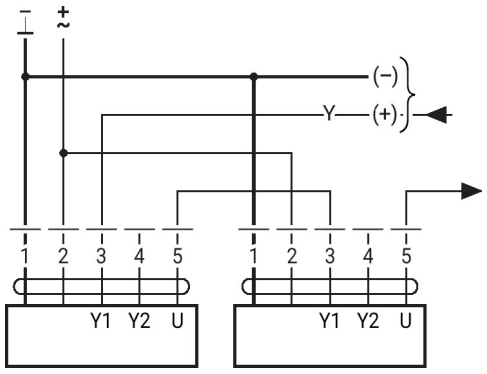

Max. 2 actuators in primary/secondary operation
Primary/secondary operation is permitted only on one fixed shaft or on two mechanically coupled shafts
The programming of the primary actuator is adopted by the secondary actuator

Further electrical installations

Functions with basic values (conventional mode)

Override control with AC 24 V with relay contacts

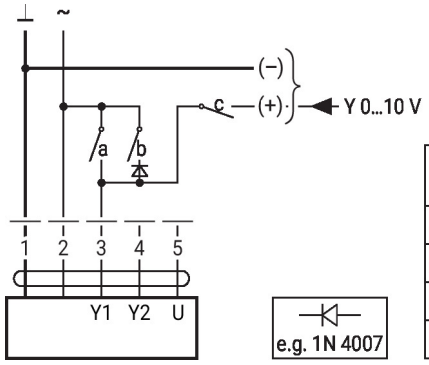

1	2	a	b	c	
					0 %
					ZS 50%
					100%
					Y

Override control with AC 24 V with rotary switch

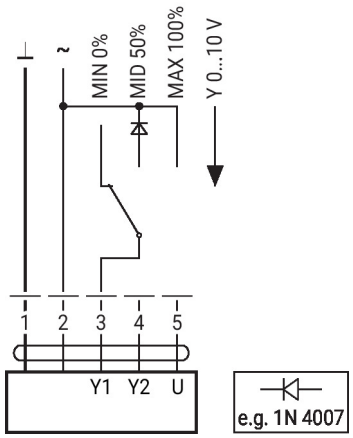

Control remotely 0...100% with positioner SG..

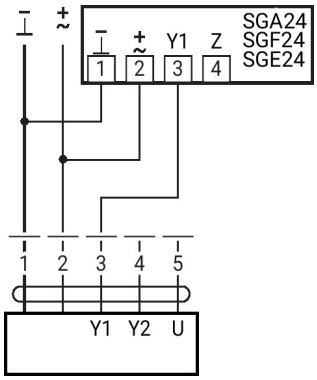

Minimum limit with positioner SG..

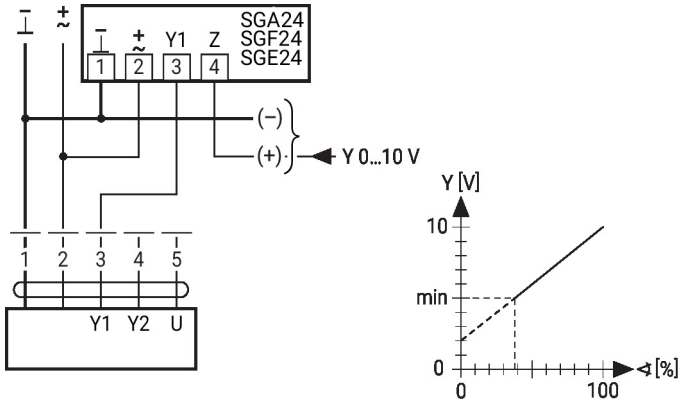

Control with 4...20 mA via external resistor

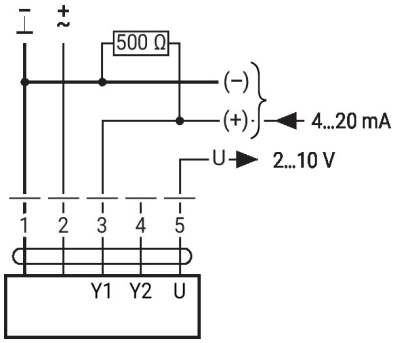

Further electrical installations

Functions with basic values (conventional mode)

Functional check

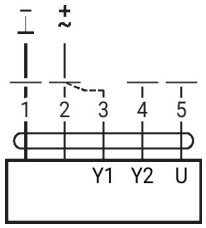

Procedure
1. Apply 24 V to connection 1 and 2
2. Disconnect connection 3:
- with upwards direction of motion: closing point at top
- with downwards direction of motion: closing point at bottom
3. Short circuit connections 2 and 3:
- Actuator runs in the opposite direction

Functions with specific parameters (configuration necessary)

Override control and limiting with AC 24 V with relay contacts

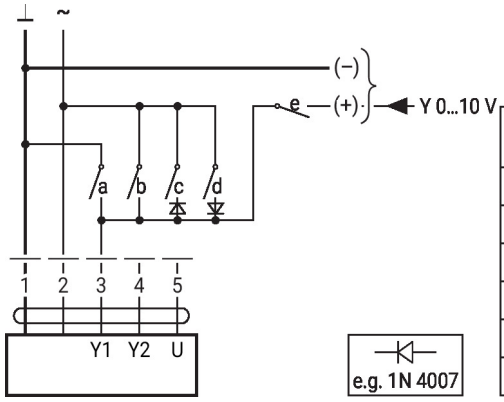

1	2	a	b	c	d	e	
							Close[1)]
							MIN
							ZS
							MAX
							Open
							Y

Control on/off

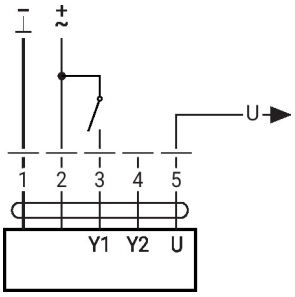

Control floating point

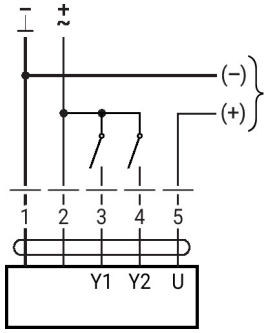

1	2	3 (a)	3 (b)	L		R	
				stop	stop	stop	stop

Further electrical installations

Functions with specific parameters (configuration necessary)

Override control and limiting with AC 24 V with rotary switch

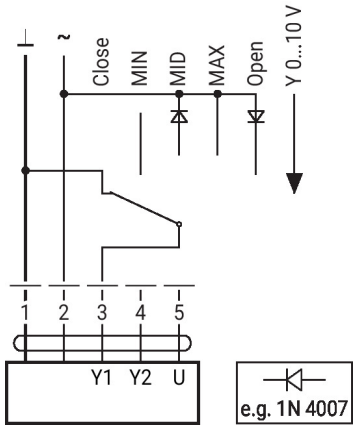

Caution:
The "Close" function is only guaranteed if the start point of the operating range is defined as min. 0.5 V.

Dimensions

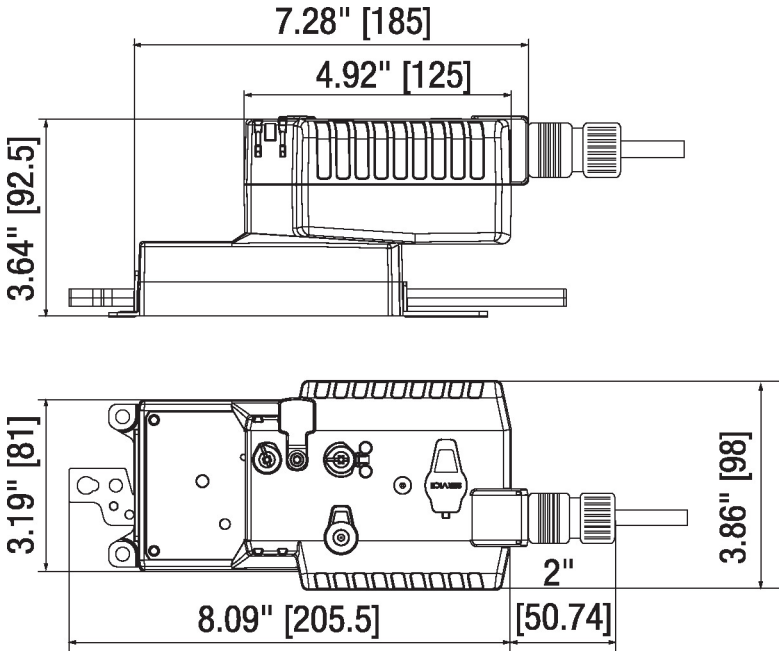

Further documentation

• Quick Guide – Belimo Assistant 2