Customizable Non Fail-Safe multifunction technology actuator for controlling dampers in typical commercial HVAC applications.

- Actuating force motor 450 N [100 lbf]
- Nominal voltage AC/DC 24 V
- Control MFT/programmable
- Position feedback 2...10 V



Picture may differ from product

5-year warranty

MFT

Technical data

Electrical data	Nominal voltage	AC/DC 24 V
	Nominal voltage frequency	50/60 Hz
	Nominal voltage range	AC 19.2...28.8 V / DC 19.2...28.8 V
	Power consumption in operation	3.5 W
	Power consumption in rest position	1.3 W
	Transformer sizing	6 VA
	Electrical connection	18 AWG plenum cable with 1/2" NPT conduit connector, degree of protection NEMA 2 / IP54, 1 m, 3 m, and 5 m
	Overload Protection	electronic throughout full stroke
Functional data	Actuating force motor	450 N [100 lbf]
	Operating range Y	2...10 V
	Operating range Y note	4...20 mA w/ ZG-R01 (500 Ω, 1/4 W resistor)
	Operating range Y variable	Start point 0.5...30 V End point 2.5...32 V
	Operating modes optional	variable (VDC, on/off, floating point)
	Position feedback U	2...10 V
	Position feedback U note	Max. 0.5 mA
	Position feedback U variable	VDC variable
	Direction of motion motor	reversible with switch
	Manual override	external push button
	Stroke	8" [200 mm]
	Running Time (Motor)	150 s / 100 mm
	Sound power level motor	35 dB(A)
	Position indication	Mechanical
Safety data	Power source UL	Class 2 Supply
	Degree of protection NEMA/UL	NEMA 2
	Housing	UL Enclosure Type 2
	Agency Listing	cULus acc. to UL60730-1A/-2-14, CAN/CSA E60730-1:02 CE acc. to 2014/30/EU and 2014/35/EU
	Quality Standard	ISO 9001
	UL 2043 Compliant	Suitable for use in air plenums per Section 300.22(C) of the NEC and Section 602 of the IMC
	Ambient humidity	Max. 95% RH, non-condensing
	Ambient temperature	-22...122°F [-30...50°C]
	Storage temperature	-40...176°F [-40...80°C]
	Servicing	maintenance-free

Technical data

Weight	Weight	2.5 lb [1.2 kg]
Materials	Housing material	UL94-5VA

Footnotes †Rated Impulse Voltage 800V, Type of Action 1, Control Pollution Degree 2.

Product features

Application For proportional modulation of dampers in HVAC systems. Actuator sizing should be done in accordance with the damper manufacturer's specifications. The default parameters for 2...10 V applications of the ..MFT actuator are assigned during manufacturing. If necessary, custom versions of the actuators can be ordered. The parameters can be changed by two means: pre-set and custom configurations from Belimo or on-site configurations using the Belimo PC-Tool software.

Operation The actuator is not provided with and does not require and limit switches, but is electronically protected against overload. The anti-rotation strap supplied with the actuator will prevent lateral movement.

The actuator provides 4" [100 mm] of linear stroke. The stroke of the gear rack can be adjusted on both sides in increments of 0.8" [20 mm] by means of the mechanical end stops.

When reaching the damper or actuator end position, the actuator automatically stops. The gears can be manually disengaged with a button on the actuator cover.

The actuators use a sensorless brushless DC motor, which is controlled by an Application Specific Integrated Circuit (ASIC). The ASIC monitors and controls the actuator's rotation and provides a digital rotation sensing (DRS) function to prevent damage to the actuator in a stall condition. Power consumption is reduced in holding mode.

Typical specification Proportional control damper actuators shall be electronic type, with integrated linear stroking arm. Actuators must provide control in response to a control input from an electronic controller or positioner. Actuators shall have Brushless DC motor technology and be protected from overload at all angles of rotation. Actuators shall have reversing switch and manual override on the cover. Run time shall be constant and independent of torque. Actuators shall be cULus listed, have a 5-year warranty, and be manufactured under ISO 9001 International Quality Control Standards. Actuators shall be as manufactured by Belimo.

Accessories

Tools

Description	Type
Service tool for wired and wireless setup, on-site operation and troubleshooting.	Belimo Assistant 2
Signal simulator, Power supply AC 120 V	PS-100
Connecting cable 16 ft [5 m], A: RJ11 6/4 LINK.10, B: 6-pin for connection to service socket	ZK1-GEN
Connecting cable 16 ft [5 m], A: RJ11 6/4 LINK.10, B: free wire end for connection to MP/PP terminal	ZK2-GEN
Connecting cable 10 ft [3 m], A: RJ11 6/4 LINK.10, B: 3-pin Weidmüller and supply connection	ZK4-GEN
Service tool, with ZIP-USB function, for configurable and communicative Belimo actuators, VAV controller and HVAC performance devices	ZTH US

Electrical accessories

Description	Type
	IRM-100
Convert Pulse Width Modulated Signal to a 2...10 V Signal for Belimo Proportional Actuators	PTA-250
Positioner for wall mounting	SGA24
Positioner for front-panel mounting	SGF24
Cable conduit connector 1/2"	TF-CC US
Gateway MP to BACnet MS/TP	UK24BAC
Gateway MP to LonWorks	UK24LON
Gateway MP to Modbus RTU	UK24MOD
Resistor, 500 Ω, 1/4" wire resistor with 6" pigtail wires	ZG-R01

Accessories

	Description	Type
	Resistor kit, 50% voltage divider	ZG-R02
	Transformer, AC 120 V to AC 24 V, 40 VA	ZG-X40
		ZS-T

Mechanical accessories	Description	Type
	Ball joint suitable for damper crank arm KH8 / KH10	KG10A
	Ball joint suitable for damper crank arm KH8	KG6
	Ball joint suitable for damper crank arm KH8	KG8
		SH8
	Rotary support, for linear actuator, for compensation of transverse forces	Z-DS1
		Z-KSC
		ZG-119

Electrical installation

Wire colors:
1 = black
2 = red
3 = white
4 = pink
5 = orange

AC/DC 24 V, modulating

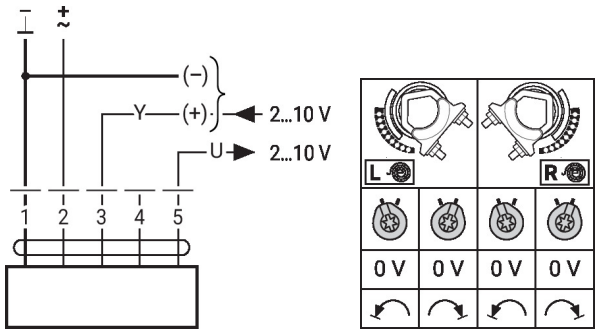

Wiring diagram piggy-back operation (mechanically coupled actuators)

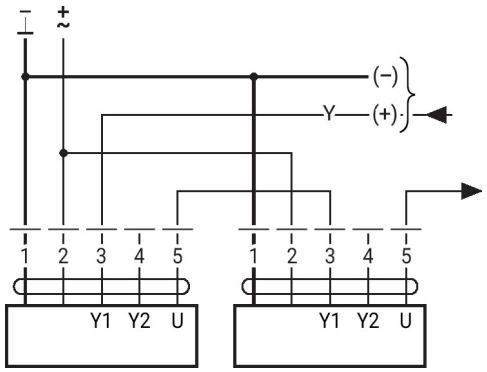

Max. 2 actuators in primary/ secondary operation
Primary/secondary operation is permitted only on one fixed shaft or on two mechanically coupled shafts
The programming of the primary actuator is adopted by the secondary actuator

Further electrical installations

Functions with basic values (conventional mode)

Override control with AC 24 V with relay contacts

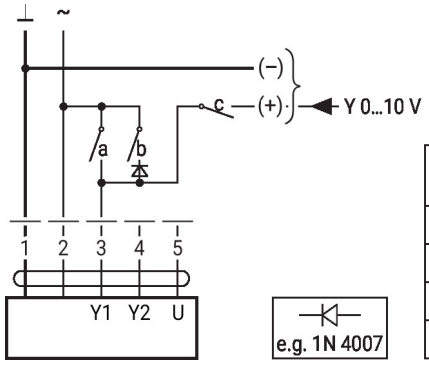

1	2	a	b	c	
					0 %
					ZS 50%
					100%
					Y

Override control with AC 24 V with rotary switch

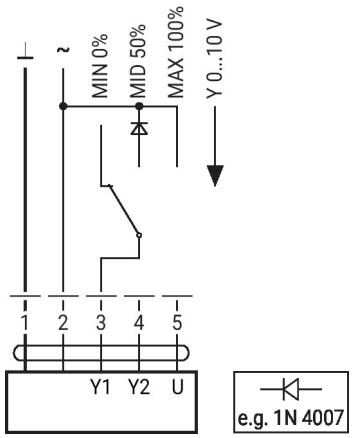

Control remotely 0...100% with positioner SG..

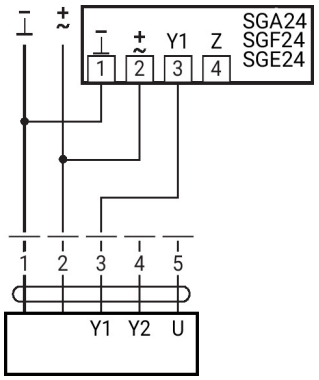

Minimum limit with positioner SG..

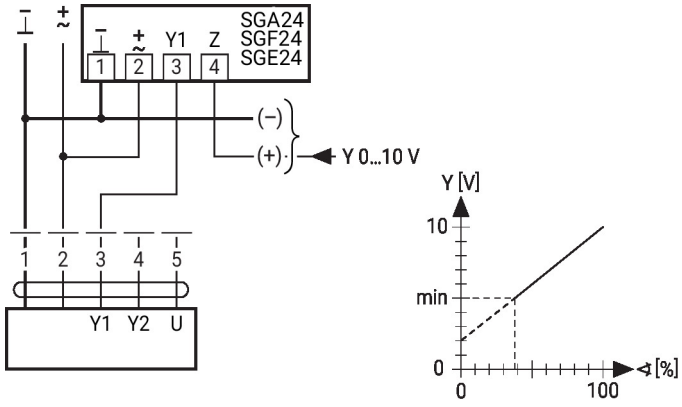

Control with 4...20 mA via external resistor

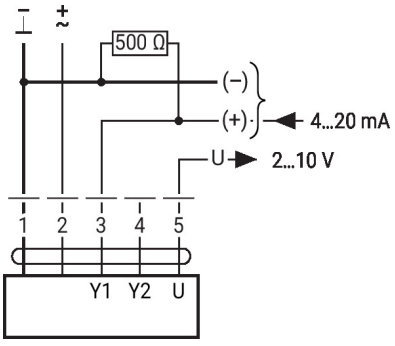

Further electrical installations

Functions with basic values (conventional mode)

Functional check

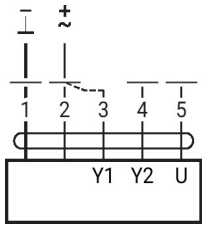

Procedure
1. Apply 24 V to connection 1 and 2
2. Disconnect connection 3:
- with upwards direction of motion: closing point at top
- with downwards direction of motion: closing point at bottom
3. Short circuit connections 2 and 3:
- Actuator runs in the opposite direction

Functions with specific parameters (configuration necessary)

Override control and limiting with AC 24 V with relay contacts

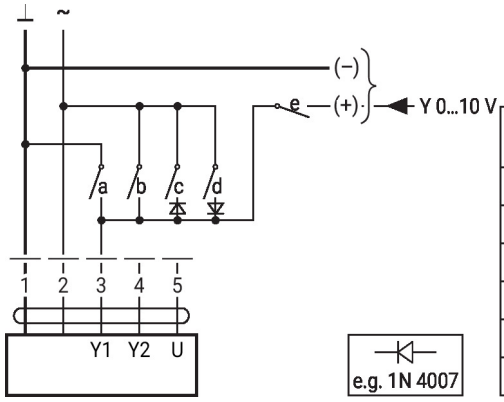

1	2	a	b	c	d	e	
							Close[1)]
							MIN
							ZS
							MAX
							Open
							Y

Control on/off

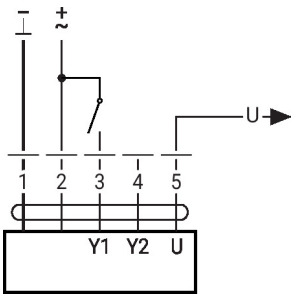

Control floating point

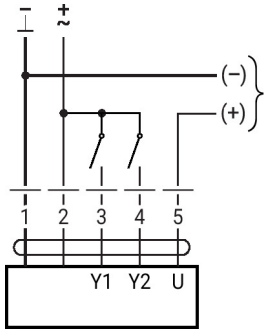

1	2	3 (a)	3 (b)	L		R	
				stop	stop	stop	stop

Further electrical installations

Functions with specific parameters (configuration necessary)

Override control and limiting with AC 24 V with rotary switch

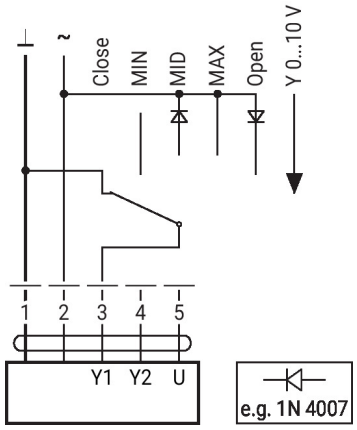

Caution:
The "Close" function is only guaranteed if the start point of the operating range is defined as min. 0.5 V.

Dimensions

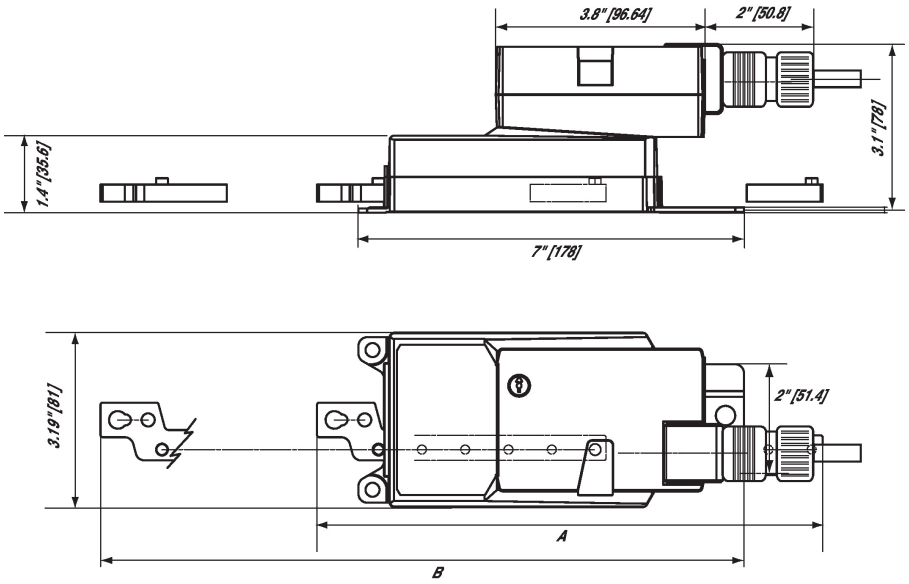

Further documentation

• Quick Guide – Belimo Assistant 2