BELIMO

Technical data sheet GKB24-IP

Cloud capable and communicating fail-safe damper actuator for controlling dampers in typical commercial HVAC applications.



Picture may differ from product

5-year warranty

Technical data

Electrical data	Nominal voltage	AC/DC 24 V
	Nominal voltage frequency	50/60 Hz
	Nominal voltage range	AC 19.2...28.8 V / DC 21.6...28.8 V
	Power consumption in operation	11 W
	Power consumption in rest position	3 W
	Transformer sizing	21 VA
	Connection supply/control	Cable 3 ft. [1 m], 6x 0.5 mm², Plenum
	Parallel operation	Yes (note the performance data)
	Overload Protection	electronic throughout 0...95° rotation
Data bus communication	Communicative control	Cloud BACnet/IP Modbus TCP
	Number of nodes	BACnet / Modbus see interface description
Functional data	Torque motor	360 in-lb [40 Nm]
	Operating range Y	2...10 V
	Operating range Y note	Hybrid via 2...10 V
	Input impedance	34 kΩ
	Operating range Y variable	0.5...10 V
	Position feedback U	2...10 V
	Position feedback U note	Max. 0.5 mA
	Position feedback U variable	VDC variable
	Bridging time (PF)	2 s
	Pre-charging time	5...20 s
	Position accuracy	±5%
	Direction of motion motor	selectable with switch 0/1
	Direction of motion fail-safe	reversible with switch
	Manual override	external push button
	Angle of rotation	95°
	Angle of rotation note	adjustable with mechanical stop
	Running Time (Motor)	150 s / 90°

Technical data

Functional data	Running time motor variable	70...220 s
	Running time fail-safe	<35 s
	Sound power level motor	52 dB(A)
	Sound power level, fail-safe	61 dB(A)
	Adaptation Setting Range	manual
	Position indication	Mechanical, pluggable
Safety data	Protection class IEC/EN	III, Safety Extra-Low Voltage (SELV)
	Power source UL	Class 2 Supply
	Degree of protection IEC/EN	IP54 when using protective cap or protective grommet for RJ45 socket
	Degree of protection NEMA/UL	NEMA 1
	Housing	UL Enclosure Type 1
	EMC	CE according to 2014/30/EU
	Agency Listing	cULus acc. to UL60730-1A/-2-14, CAN/CSA E60730-1:02 CE acc. to 2014/30/EU and 2014/35/EU
	Quality Standard	ISO 9001
	UL 2043 Compliant	Suitable for use in air plenums per Section 300.22(C) of the NEC and Section 602 of the IMC
	Type of action	Type 1
	Rated impulse voltage supply / control	0.8 kV
	Ambient humidity	Max. 95% RH, non-condensing
	Ambient temperature	-22...122°F [-30...50°C]
	Storage temperature	-40...176°F [-40...80°C]
	Servicing	maintenance-free
Weight	Weight	3.9 lb [1.8 kg]
Materials	Housing material	UL94-5VA

Safety notes



- The device must not be used outside the specified field of application, especially not in aircraft or in any other airborne means of transport.
- Outdoor application: Only possible if no (sea) water, snow, ice, sunlight, or aggressive gases directly act on the device, and if it is ensured that the ambient conditions remain within the limit values specified in the data sheet at all times.
- Only authorized specialists may carry out installation. All applicable legal or institutional installation regulations must be complied with during installation.
- The device may only be opened at the manufacturer's site. It does not contain any parts that can be replaced or repaired by the user.
- Cables must not be removed from the device.
- To calculate the torque required, the specifications supplied by the damper manufacturers concerning the cross-section and design, as well as the installation site and ventilation conditions, must be observed.
- The device contains electrical and electronic components and must not be disposed of as household refuse. All locally valid regulations and requirements must be observed.

Product features

Operating mode

The actuator is controlled via the Cloud, BACnet/IP or Modbus TCP and drives to the position defined by the control signal. Various data points can be written and read via the same interfaces.

Hybrid mode:

The actuator receives its analog control signal from the higher-level controller and moves to the defined position. Using the Cloud, BACnet/IP or Modbus TCP, various data points can be read and, with the exception of the control signal, written.

Converter for sensors

Connection option for two sensors (passive sensor, active sensor or switching contact). The actuator serves as an analog/digital converter for the transmission of the sensor signal to the higher level system.

Communication

The configuration can be carried out through the integrated web server (RJ45 connection to the web browser), by communicative means or via the Cloud.

Additional information regarding the integrated web server can be found in the separate documentation.

"Peer to Peer" connection
http://belimo.local:8080
The Notebook must be set to "DHCP".
Make sure that only one network connection is active.
Standard IP address:
http://192.168.0.10:8080
Static IP address
Password (read-only):
User name: «guest»
Password: «guest»

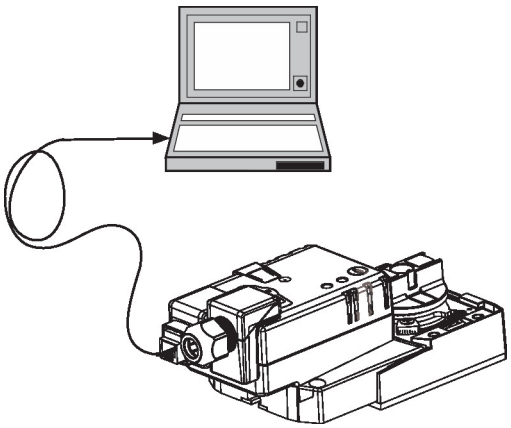

Control signal inversion

This can be inverted in cases of control with an analogue control signal. The inversion causes the reversal of the standard behavior, i.e. for control signal 0%, the actuator is opened to max and for control signal 100%, the actuator is closed.

Simple direct mounting

Simple direct mounting on the damper shaft with a universal shaft clamp, supplied with an anti-rotation mechanism to prevent the actuator from rotating.

Data recording

The recorded data (integrated data recording for 13 months) can be used for analytical purposes.

Download csv files via web browser.

Manual override

Manual override with push-button possible (the gear train is disengaged for as long as the button is pressed or remains locked).

Adjustable angle of rotation

Adjustable angle of rotation with mechanical end stops.

High functional reliability

The actuator is overload protected, requires no limit switches and automatically stops when the end stop is reached.

Home position

The first time the supply voltage is switched on, i.e. at the time of commissioning, the actuator carries out an adaptation, which is when the operating range and position feedback adjust themselves to the mechanical setting range.

The actuator then moves into the position defined by the control signal.

Adaptation and synchronization

An adaptation can be triggered manually by pressing the "Adaptation" button. Both mechanical end stops are detected during the adaptation (entire setting range).

The actuator then moves into the position defined by the control signal.

Accessories

Tools	Description	Type
	Connecting cable 16 ft [5 m], A: RJ11 6/4 LINK.10, B: 6-pin for connection to service socket	ZK1-GEN
	Service tool, with ZIP-USB function, for configurable and communicative Belimo actuators, VAV controller and HVAC performance devices	ZTH US

Electrical accessories	Description	Type
	Grommet for RJ connection module, Multipack 50 pcs.	Z-STRJ.1

Electrical installation

Supply from isolating transformer.

Parallel connection of other actuators possible. Observe the performance data.

Wire colors:
1 = black
2 = red
3 = white
5 = orange

MP-Bus

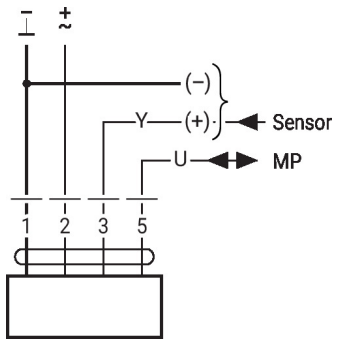

AC/DC 24 V, modulating

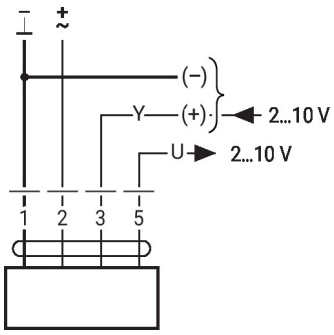

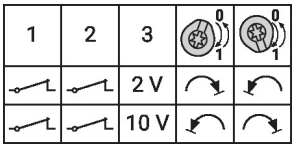

Further electrical installations

The connection diagrams shows connections for the first sensor on terminal S1, while the second sensor can be connected identically on terminal S2.

Parallel use of different sensor types is permitted.

For hybrid operation, S1 is used for the control signal Y and must be configured as an active sensor.

Further electrical installations

Functions with basic values (conventional mode)

Override control with AC 24 V with relay contacts

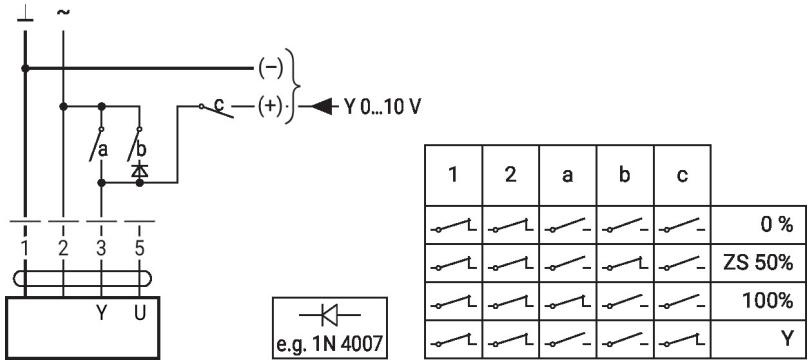

1	2	a	b	c	
					0 %
					ZS 50%
					100%
					Y

Override control with AC 24 V with rotary switch

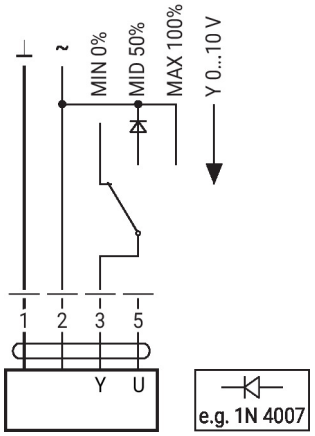

Control remotely 0...100% with positioner SG..

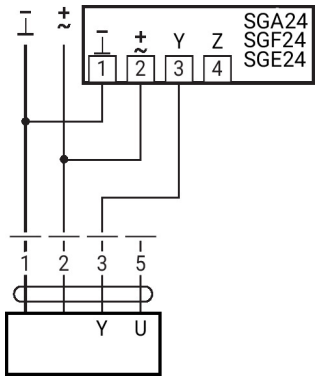

Minimum limit with positioner SG..

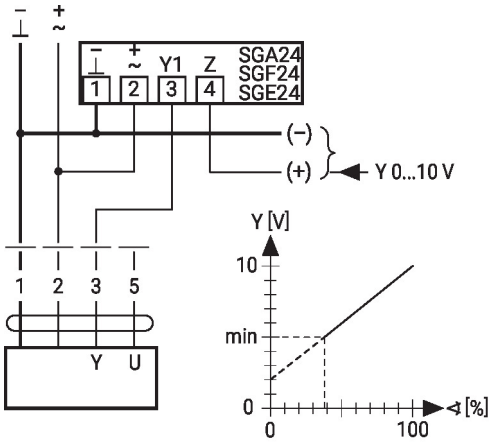

Primary/secondary operation (position-dependent)

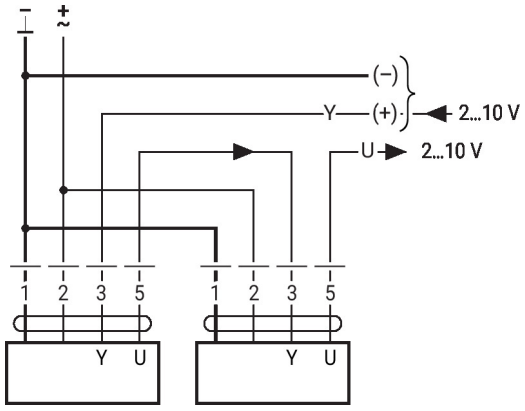

Control with 4...20 mA via external resistor

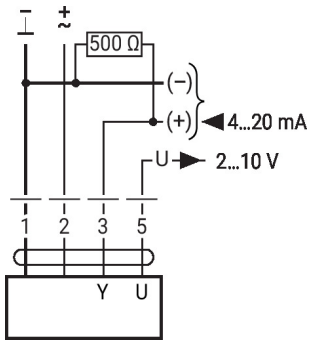

Caution:
The operating range must be set to DC 2...10 V.
The 500 Ohm resistor converts the 4...20 mA current signal to a voltage signal DC 2...10 V.

Further electrical installations

Functions with basic values (conventional mode)

Functional check

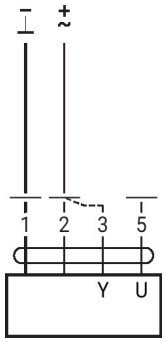

Procedure
1. Connect 24 V to connections 1 and 2
2. Disconnect connection 3:
– With direction of rotation 0: Actuator rotates to the left
– With direction of rotation 1: Actuator rotates to the right
3. Short-circuit connections 2 and 3:
– Actuator runs in opposite direction

Functions with basic values (conventional mode)

MP-Bus Network topology

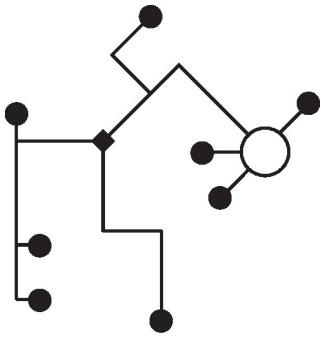

There are no restrictions for the network topology (star, ring, tree or mixed forms are permitted).
Supply and communication in one and the same 3-wire cable
• no shielding or twisting necessary
• no terminating resistors required

Connection on the MP-Bus

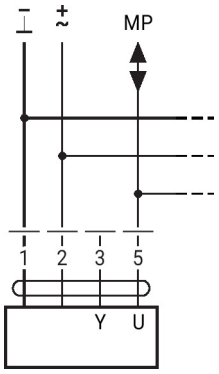

Max. 8 MP-Bus nodes

Connection of active sensors

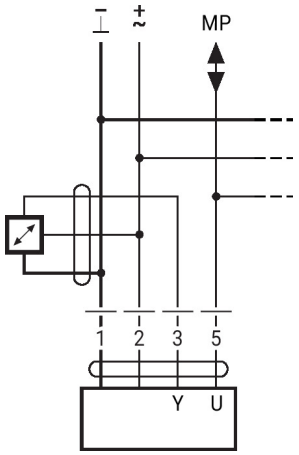

• Supply AC/DC 24 V
• Output signal 0...10 V (max. 0...32 V)
• Resolution 30 mV

Connection of external switching contact

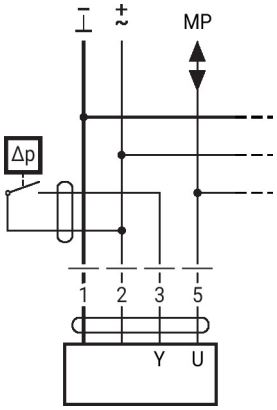

• Switching current 16 mA @ 24 V
• Start point of the operating range must be configured on the MP actuator as ≥0.5 V

Further electrical installations

Functions with basic values (conventional mode)

Connection of passive sensors

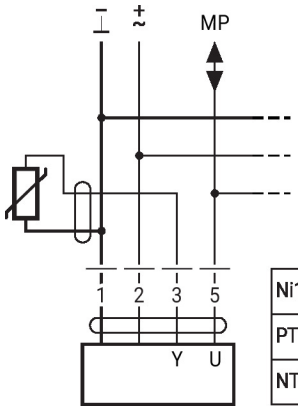

Ni1000	–28...+98°C	850...1600 Ω 2)
PT1000	–35...+155°C	850...1600 Ω 2)
NTC	–10...+160°C 1)	200 Ω...60 kΩ 2)

1) Depending on the type
2) Resolution 1 Ohm
Compensation of the measured value is recommended

Functions with specific parameters (configuration necessary)

Override control and limiting with AC 24 V with relay contacts

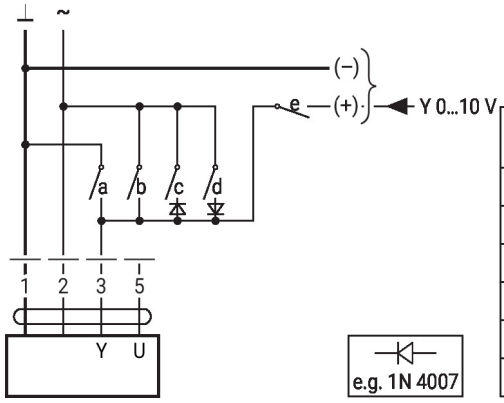

1	2	a	b	c	d	e	
							Close
							MIN
							ZS
							MAX
							Open
							Y

Control on/off

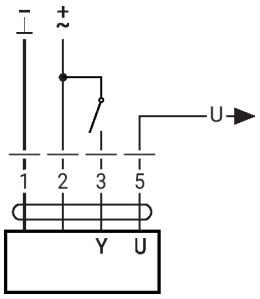

Control 3-point with AC 24 V

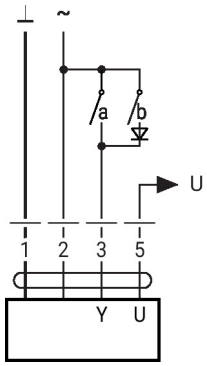

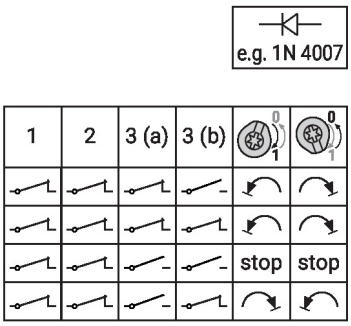

Override control and limiting with AC 24 V with rotary switch

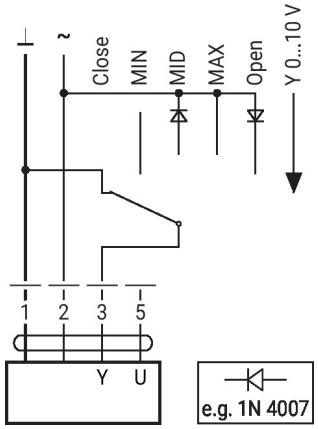

Caution:
The "Close" function is only guaranteed if the start point of the operating range is defined as min. 0.5 V.

Dimensions

