Basic Fail-Safe multifunction technology actuator for controlling dampers in typical commercial HVAC applications.

- **Torque motor 360 in-lb [40 Nm]**
- **Nominal voltage AC/DC 24 V**
- **Control MFT/programmable**
- **Position feedback 2...10 V**



Picture may differ from product

5-year warranty

LISTED 94 D5 TEMP. IND. & REG. EQUIP.

BRUSHLESS dc motor

MFT

Technical data

Electrical data	Nominal voltage	AC/DC 24 V
	Nominal voltage frequency	50/60 Hz
	Nominal voltage range	AC 19.2...28.8 V / DC 21.6...28.8 V
	Power consumption in operation	11 W
	Power consumption in rest position	3 W
	Transformer sizing	21 VA
	Electrical connection	18 AWG appliance or plenum cables, 1 m, 3 m or 5 m, with or without 1/2" NPT conduit connector
	Overload Protection	electronic throughout 0...95° rotation
	Electrical Protection	actuators are double insulated
Functional data	Torque motor	360 in-lb [40 Nm]
	Operating range Y	2...10 V
	Operating range Y note	4...20 mA w/ ZG-R01 (500 Ω, 1/4 W resistor)
	Input impedance	100 kΩ for 2...10 V (0.1 mA), 500 Ω for 4...20 mA, 1500 Ω for PWM, On/Off and Floating point
	Operating range Y variable	Start point 0.5...30 V End point 2.5...32 V
	Operating modes optional	variable (VDC, PWM, on/off, floating point)
	Position feedback U	2...10 V
	Position feedback U note	Max. 0.5 mA
	Position feedback U variable	VDC variable
	Setting fail-safe position	adjustable with dial or tool 0...100% in 10% increments
	Bridging time (PF)	2 s
	Bridging time (PF) variable	0...10 s
	Pre-charging time	5...26 s
	Direction of motion motor	selectable with switch 0/1
	Direction of motion fail-safe	reversible with switch
	Manual override	external push button
	Angle of rotation	Max. 95°
	Angle of rotation note	adjustable with mechanical stop
	Running Time (Motor)	150 s / 90°

Technical data

Functional data	Running time motor variable	90...150 s
	Running time fail-safe	<35 s
	Sound power level motor	52 dB(A)
	Sound power level, fail-safe	61 dB(A)
	Adaptation Setting Range	off (default)
	Override control	MIN (minimum position) = 0% MID (intermediate position) = 50% MAX (maximum position) = 100%
	Position indication	Mechanical, 30...65 mm stroke
Safety data	Power source UL	Class 2 Supply
	Degree of protection NEMA/UL	NEMA 2
	Housing	UL Enclosure Type 2
	Agency Listing	cULus acc. to UL60730-1A/-2-14, CAN/CSA E60730-1:02, CE acc. to 2014/30/EU
	Quality Standard	ISO 9001
	UL 2043 Compliant	Suitable for use in air plenums per Section 300.22(C) of the NEC and Section 602 of the IMC
	Ambient humidity	Max. 95% RH, non-condensing
	Ambient temperature	-22...122°F [-30...50°C]
	Storage temperature	-40...176°F [-40...80°C]
	Servicing	maintenance-free
Weight	Weight	4.6 lb [2.1 kg]
Materials	Housing material	UL94-5VA

Footnotes

*Variable when configured with MFT options.

†Rated Impulse Voltage 800V, Type of action 1.AA, Control Pollution Degree 3

Product features

Default/Configuration

Default parameters for 2 to 10 VDC applications of the GK..-MFT actuator are assigned during manufacturing. If required, custom versions of the actuator can be ordered. The parameters are variable and can be changed by three means: Factory pre-set or custom configuration, set by the customer using PC-Tool software or the handheld ZTH US.

Application

For fail-safe, modulating control of dampers in HVAC systems. Actuator sizing should be done in accordance with the damper manufacturer's specifications. A feedback signal is provided for position indication or primary and secondary applications. Maximum of two GK's can be piggybacked for torque loads of up to 720 in-lbs. Minimum 1" diameter shaft and primary and secondary wiring.

Product features

Operation

The GK..24-MFT provides 95° of rotation and a visual indicator shows the position of the actuator. When reaching the damper or actuator end position the actuator automatically stops. The gear can be manually disengaged by pressing the button located on the actuator cover. The GK..24-MFT actuator uses a brushless DC motor, which is controlled by an Application Specific Integrated Circuit (ASIC). The ASIC monitors and controls the actuators rotation and provides a digital rotation sensing (DRS) function to prevent damage to the actuator in a stall condition. Power consumption is reduced in a holding mode. The actuator is electronically protected against overload. The anti-rotation strap supplied with the actuator will prevent lateral movement. Add-on auxiliary switches or feedback potentiometers are easily fastened directly onto the actuator body for signaling and switching functions.

Fail-Safe Indication

LED status indicator lights sequence:

Yellow off / Green on: operation ok, no faults

Yellow off / Green blinking: fail-safe mechanism is active

Yellow on / Green off: fault is detected

Yellow off / Green off: not in operation / capacitors charging

Yellow on / Green on: adaption running

Yellow blinking / Green on: communication with programming tool

Typical specification

Modulating control, electrical fail-safe damper actuators shall be electronic direct-coupled type, which require no crank arm and linkage and be capable of direct mounting to shaft up to 1.05" diameter. Actuators must provide modulating damper control response to a 2 to 10 VDC or, with the addition of a 500Ω resistor, a 4 to 20 mA control input from an electronic controller or positioner. Actuators shall have brushless DC motor technology and be protected from overload at all angles of rotation. Actuators shall have reversing switch and manual override on the cover. Run time shall be constant and independent of torque. A 2 to 10 VDC feedback signal shall be provided for position feedback or primary and secondary applications. Actuators shall be cULus listed, have a 5-year warranty, and be manufactured under ISO 9001 International Quality Control Standards. Actuators shall be as manufactured by Belimo.

Bridging time

Power failures can be bridged up to a maximum of 10 s.

In the event of a power failure, the actuator will remain stationary in accordance with the set bridging time. If the power failure is greater than the set bridging time, the actuator will move into the selected fail-safe position.

The bridging time set at the factory is 2 s. It can be modified on site in operation by means of the Belimo service tool MFT-P.

Settings: The rotary knob must not be set to the "PROG FAIL-SAFE" position!

For retroactive adjustments of the bridging time with the Belimo service tool MFT-P or with the ZTH EU adjustment and diagnostic device only the values need to be entered.

Factory settings

Default parameters for 2 to 10 VDC applications of the GK..-MFT actuator are assigned during manufacturing. If required, custom versions of the actuator can be ordered. The parameters are variable and can be changed by three means: Factory pre-set or custom configuration, set by the customer using PC-Tool software or the handheld ZTH US.

Accessories

Tools

Description	Type
Connecting cable 16 ft [5 m], A: RJ11 6/4 LINK.10, B: 6-pin for connection to service socket	ZK1-GEN
Connecting cable 16 ft [5 m], A: RJ11 6/4 LINK.10, B: free wire end for connection to MP/PP terminal	ZK2-GEN
Service tool, with ZIP-USB function, for configurable and communicative Belimo actuators, VAV controller and HVAC performance devices	ZTH US

Electrical accessories

Description	Type
	IRM-100
Feedback potentiometer 10 kΩ add-on, grey	P10000A GR
Feedback potentiometer 1 kΩ add-on, grey	P1000A GR

Accessories

Description	Type
Feedback potentiometer 140 Ω add-on, grey	P140A GR
Feedback potentiometer 2.8 kΩ add-on, grey	P2800A GR
Auxiliary switch, mercury-free	P475
Auxiliary switch, mercury-free	P475-1
Feedback potentiometer 5 kΩ add-on, grey	P5000A GR
Feedback potentiometer 500 Ω add-on, grey	P500A GR
Signal simulator, Power supply AC 120 V	PS-100
Convert Pulse Width Modulated Signal to a 2...10 V Signal for Belimo Proportional Actuators	PTA-250
Auxiliary switch 1x SPDT add-on	S1A
Auxiliary switch 2x SPDT add-on	S2A
Positioner for wall mounting	SGA24
Positioner for front-panel mounting	SGF24
Cable conduit connector 1/2"	TF-CC US
Gateway MP to BACnet MS/TP	UK24BAC
Gateway MP to LonWorks	UK24LON
Gateway MP to Modbus RTU	UK24MOD
Resistor, 500 Ω, 1/4" wire resistor with 6" pigtail wires	ZG-R01
Resistor kit, 50% voltage divider	ZG-R02

Mechanical accessories

Description	Type
Actuator arm for standard shaft clamp	AH-GMA
Shaft extension 240 mm ø20 mm for damper shaft ø8...22.7 mm	AV8-25
Ball joint suitable for damper crank arm KH8 / KH10	KG10A
	K-GM20
Damper crank arm Slot width 8.2 mm, clamping range ø14...25 mm [1/2...1"]	KH10
Push rod for KG10A ball joint L 36", 3/8" diameter	SH10
Mounting bracket for AF..	ZG-100
Mounting bracket for AF / NF	ZG-101
	ZG-102
Mounting bracket	ZG-103
Mounting bracket	ZG-104
Mounting bracket	ZG-109
Linkage kit	ZG-110
	ZG-DC1
	ZG-DC2
Mounting kit for linkage operation for flat installation	ZG-GMA
	ZG-JSA-1
	ZG-JSA-2
	ZG-JSA-3
Baseplate extension for GM..A to GM..	Z-GMA
Weather shield 13x8x6" [330x203x152 mm] (LxWxH)	ZS-100
Baseplate, for ZS-100	ZS-101
Weather shield 406x213x102 mm [16x8-3/8x4"] (LxWxH)	ZS-150
Explosion proof housing 16x10x6.435" [406x254x164 mm] (LxWxH), UL and CSA, Class I, Zone 1&2, Groups B, C, D, (NEMA 7), Class III, Hazardous (classified) Locations	ZS-260
Weather shield 17-1/4x8-3/4x5-1/2" [438x222x140 mm] (LxWxH), NEMA 4X, with mounting brackets	ZS-300
Weather shield 17-1/4x8-3/4x5-1/2" [438x222x140 mm] (LxWxH), NEMA 4X, with mounting brackets	ZS-300-5
Shaft extension 1/2"	ZS-300-C1
Shaft extension 3/4"	ZS-300-C2
Shaft extension 1"	ZS-300-C3
	EF-P
	ZG-120

Electrical installation

Wire colors:
1 = black
2 = red
3 = white
4 = pink
5 = orange

AC/DC 24 V, modulating

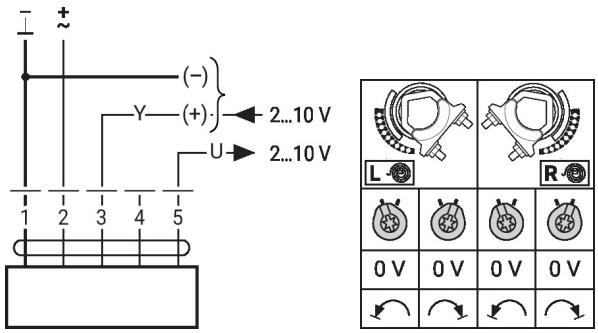

Signal cable lengths

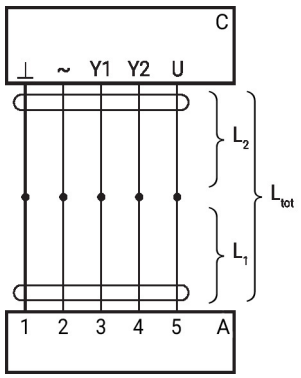

L_2 ⊥ / ~	$L_{tot} = L_1 + L_2$ AC	DC
0.75 mm²	≤30 m	≤5 m
1.00 mm²	≤40 m	≤8 m
1.50 mm²	≤70 m	≤12 m
2.50 mm²	≤100 m	≤20 m

A = Actuator
C = Control unit (controlling unit)
L1 = Connecting cable of the actuator
L2 = Customer cable
Ltot = Maximum signal cable length

Note:
When several actuators are connected in parallel, the maximum signal cable length must be divided by the number of actuators.

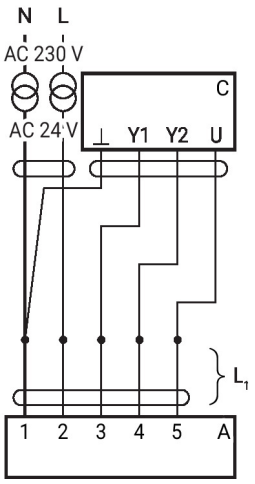

A = Actuator
C = Control unit (controlling unit)
L1 = Connecting cable of the actuator

Note:
There are no special restrictions on installation if the supply and the data cable are routed separately.

Electrical installation

Parallel operation

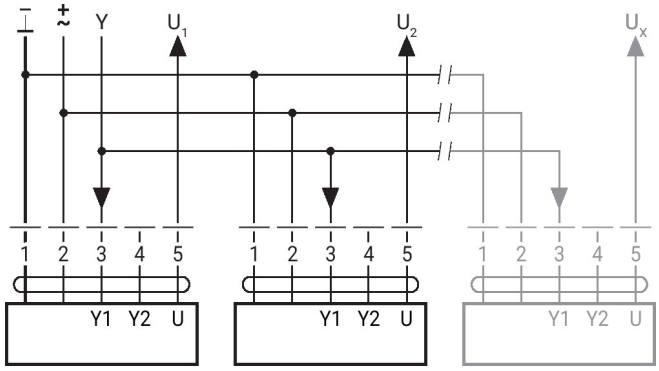

Max. 8 actuators in parallel
Parallel operation is permitted only on non-connected axes
Do not fail to observe performance data with parallel operation

Wiring diagram piggy-back operation (mechanically coupled actuators)

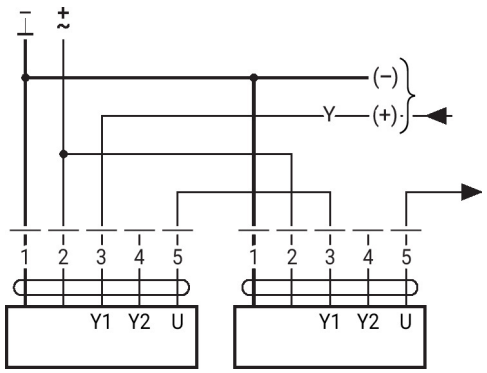

Max. 2 actuators in primary/secondary operation
Primary/secondary operation is permitted only on one fixed shaft or on two mechanically coupled shafts
The programming of the primary actuator is adopted by the secondary actuator

Further electrical installations

Functions with basic values (conventional mode)

Override control with AC 24 V with relay contacts

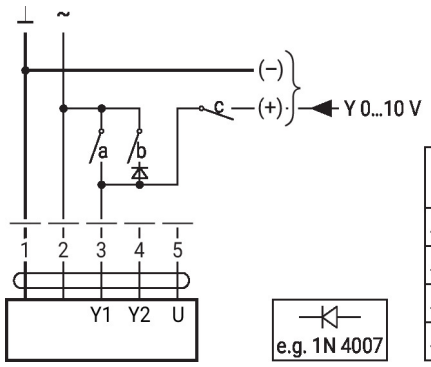

1	2	a	b	c	
					0 %
					ZS 50%
					100%
					Y

Further electrical installations

Functions with basic values (conventional mode)

Override control with AC 24 V with rotary switch

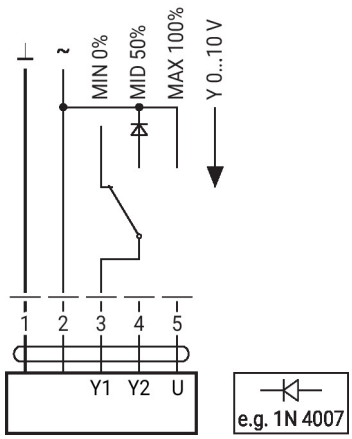

Control remotely 0...100% with positioner SG..

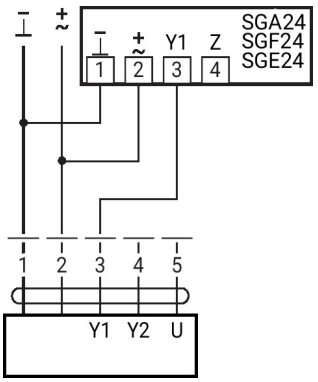

Minimum limit with positioner SG..

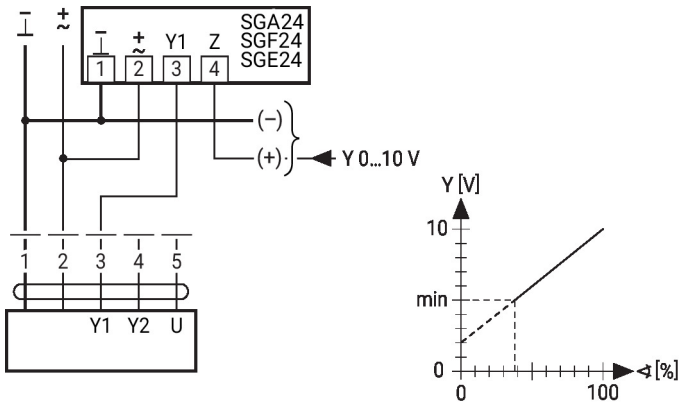

Control with 4...20 mA via external resistor

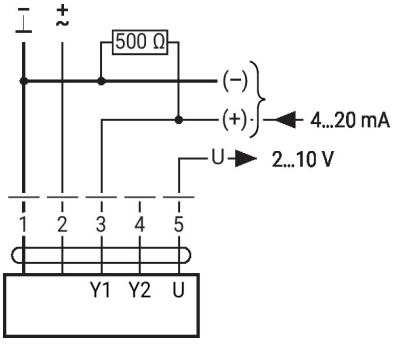

Functional check

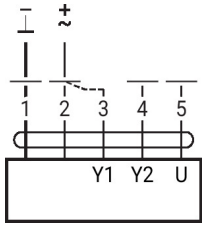

Procedure

1. Apply 24 V to connection 1 and 2
2. Disconnect connection 3:
- with upwards direction of motion: closing point at top
- with downwards direction of motion: closing point at bottom
3. Short circuit connections 2 and 3:
- Actuator runs in the opposite direction

Further electrical installations

Functions with specific parameters (configuration necessary)

Override control and limiting with AC 24 V with relay contacts

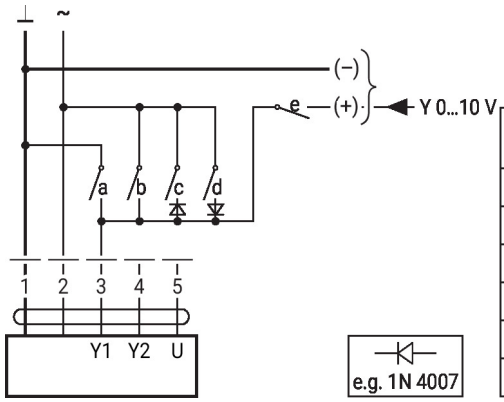

1	2	a	b	c	d	e	
							Close[1)]
							MIN
							ZS
							MAX
							Open
							Y

Control on/off

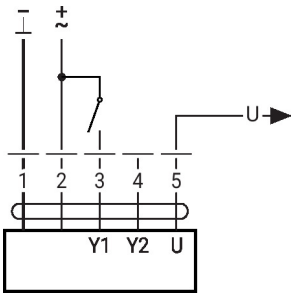

Control floating point

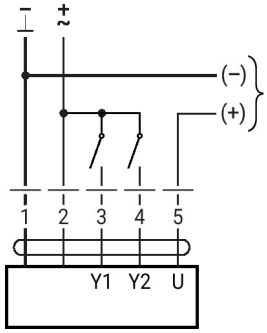

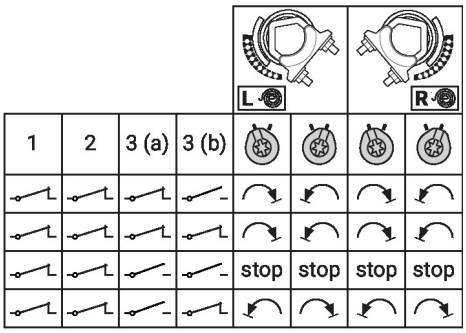

Override control and limiting with AC 24 V with rotary switch

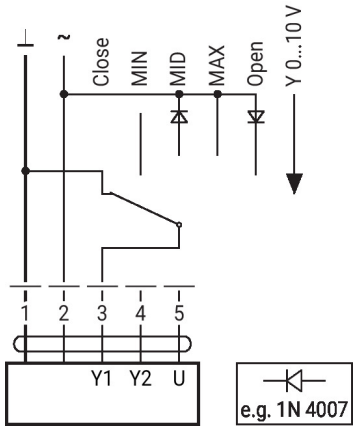

Caution:
The "Close" function is only guaranteed if the start point of the operating range is defined as min. 0.5 V.

Dimensions

PC

