Technical data sheet GKB24-SR

Basic Fail-Safe modulating actuator for controlling dampers in typical commercial HVAC applications.

- **Torque motor 360 in-lb [40 Nm]**
- **Nominal voltage AC/DC 24 V**
- **Control Modulating**
- **Position feedback 2...10 V**



Picture may differ from product

5-year warranty

Technical data

Electrical data	Nominal voltage	AC/DC 24 V
	Nominal voltage frequency	50/60 Hz
	Nominal voltage range	AC 19.2...28.8 V / DC 21.6...28.8 V
	Power consumption in operation	11 W
	Power consumption in rest position	3 W
	Transformer sizing	21 VA
	Electrical Connection	18 AWG plenum cable, 1 m, with 1/2" NPT conduit connector
	Overload Protection	electronic throughout 0...95° rotation
	Electrical Protection	actuators are double insulated
Functional data	Torque motor	360 in-lb [40 Nm]
	Operating range Y	2...10 V
	Operating range Y note	4...20 mA w/ ZG-R01 (500 Ω, 1/4 W resistor)
	Input impedance	100 kΩ (0.1 mA), 500 Ω
	Position feedback U	2...10 V
	Position feedback U note	Max. 0.5 mA
	Setting fail-safe position	adjustable with dial 0...100% in 10% increments
	Bridging time (PF)	2 s
	Pre-charging time	5...20 s
	Direction of motion motor	selectable with switch 0/1
	Direction of motion fail-safe	reversible with switch
	Manual override	external push button
	Angle of rotation	Max. 95°
	Angle of rotation note	adjustable with mechanical stop
	Running Time (Motor)	150 s / 90°
	Running time motor note	constant, independent of load
	Running time fail-safe	<35 s
	Sound power level, motor	52 dB(A)
	Sound power level, fail-safe	61 dB(A)
	Position indication	Mechanical, 30...65 mm stroke
Safety data	Power source UL	Class 2 Supply
	Degree of protection NEMA/UL	NEMA 2
	Housing	UL Enclosure Type 2
	Agency Listing	cULus acc. to UL60730-1A/-2-14, CAN/CSA E60730-1:02, CE acc. to 2014/30/EU

Technical data

Safety data	Quality Standard	ISO 9001
	UL 2043 Compliant	Suitable for use in air plenums per Section 300.22(C) of the NEC and Section 602 of the IMC
	Ambient humidity	Max. 95% RH, non-condensing
	Ambient temperature	-22...122°F [-30...50°C]
	Storage temperature	-40...176°F [-40...80°C]
	Servicing	maintenance-free
Weight	Weight	4.4 lb [2.0 kg]
Materials	Housing material	UL94-5VA

Footnotes †Rated Impulse Voltage 800V, Type of action 1.AA, Control Pollution Degree 3

Product features

Application

For fail-safe, modulating control of dampers in HVAC systems. Actuator sizing should be done in accordance with the damper manufacturer's specifications. The actuator is mounted directly to a damper shaft up to 1.05" in diameter by means of its universal clamp. A crank arm and several mounting brackets are available for applications where the actuator cannot be direct coupled to the damper shaft. The actuator operates in response to a DC 2...10 Vor, with the addition of a 500Ω resistor, a 4...20 mA control input from an electronic controller or positioner. A DC 2...10 V feedback signal is provided for position indication.

Operation

The GK..24-SR actuator provides 95° of rotation and a visual indicator shows the position of the actuator. When reaching the damper or actuator end position the actuator automatically stops. The gear can be manually disengaged by pressing the button located on the actuator cover. The GK..24-SR actuators use a brushless DC motor, which is controlled by an Application Specific Integrated Circuit (ASIC). The ASIC monitors and controls the actuators rotation and provides a digital rotation sensing (DRS) function to prevent damage to the actuator in a stall condition. Power consumption is reduced in a holding mode. The actuator is electronically protected against overload. The anti-rotation strap supplied with the actuator will prevent lateral movement. Add-on auxiliary switches or feedback potentiometers are easily fastened directly onto the actuator body for signaling and switching functions.

Fail-Safe Indication

Green LED status indicator light sequence:

On: operation ok, no faults

Blinking: fail-safe mechanism is active

Off: fault is detected or not in operation / capacitors charging

Typical specification

Modulating control, electrical fail-safe damper actuators shall be electronic direct-coupled type, which require no crank arm and linkage and be capable of direct mounting to shaft up to 1.05" diameter. Actuators must provide modulating damper control response to a 2 to 10 VDC or, with the addition of a 500 Ω resistor, a 4 to 20 mA control input from an electronic controller or positioner. Actuators shall have brushless DC motor technology and be protected from overload at all angles of rotation. Actuators shall have reversing switch and manual override on the cover. Run time shall be constant and independent of torque. A 2 to 10 VDC feedback signal shall be provided for position feedback. Actuators shall be cULus listed, have a 5-year warranty, and be manufactured under ISO 9001 International Quality Control Standards. Actuators shall be as manufactured by Belimo.

Accessories

Electrical accessories	Description	Type
		IRM-100
	Feedback potentiometer 10 kΩ add-on, grey	P10000A GR
	Feedback potentiometer 1 kΩ add-on, grey	P1000A GR
	Feedback potentiometer 140 Ω add-on, grey	P140A GR

Accessories

	Description	Type
	Feedback potentiometer 2.8 kΩ add-on, grey	P2800A GR
	Auxiliary switch, mercury-free	P475
	Auxiliary switch, mercury-free	P475-1
	Feedback potentiometer 5 kΩ add-on, grey	P5000A GR
	Feedback potentiometer 500 Ω add-on, grey	P500A GR
	Signal simulator, Power supply AC 120 V	PS-100
	Convert Pulse Width Modulated Signal to a 2...10 V Signal for Belimo Proportional Actuators	PTA-250
	Auxiliary switch 1x SPDT add-on	S1A
	Auxiliary switch 2x SPDT add-on	S2A
	Positioner for wall mounting	SGA24
	Positioner for front-panel mounting	SGF24
	Cable conduit connector 1/2"	TF-CC US
	Resistor, 500 Ω, 1/4" wire resistor with 6" pigtail wires	ZG-R01
	Resistor kit, 50% voltage divider	ZG-R02
	Transformer, AC 120 V to AC 24 V, 40 VA	ZG-X40
	Adapter for auxiliary switch and feedback potentiometer, Multipack 20 pcs.	Z-SPA
Mechanical accessories	**Description**	**Type**
	Actuator arm for standard shaft clamp	AH-GMA
	Shaft extension 240 mm ø20 mm for damper shaft ø8...22.7 mm	AV8-25
	Ball joint suitable for damper crank arm KH8 / KH10	KG10A
		K-GM20
	Damper crank arm Slot width 8.2 mm, clamping range ø14...25 mm	KH10
	Push rod for KG10A ball joint L 36”, 3/8” diameter	SH10
	Wrench 0.512 in. [13 mm]	TOOL-07
	Mounting bracket for AF..	ZG-100
	Mounting bracket for AF / NF	ZG-101
	Mounting bracket	ZG-103
	Mounting bracket	ZG-104
	Mounting bracket	ZG-109
	Linkage kit	ZG-110
		ZG-DC1
		ZG-DC2
	Mounting kit for linkage operation for flat installation	ZG-GMA
		ZG-JSA-1
		ZG-JSA-2
		ZG-JSA-3
	Baseplate extension for GM..A to GM..	Z-GMA
	Weather shield 13x8x6" [330x203x152 mm] (LxWxH)	ZS-100
	Baseplate, for ZS-100	ZS-101
	Weather shield 406x213x102 mm [16x8-3/8x4"] (LxWxH)	ZS-150
	Explosion proof housing 16x10x6.435" [406x254x164 mm] (LxWxH), UL and CSA, Class I, Zone 1&2, Groups B, C, D, (NEMA 7), Class III, Hazardous (classified) Locations	ZS-260
	Weather shield 17-1/4x8-3/4x5-1/2" [438x222x140 mm] (LxWxH), NEMA 4X, with mounting brackets	ZS-300
	Weather shield 17-1/4x8-3/4x5-1/2" [438x222x140 mm] (LxWxH), NEMA 4X, with mounting brackets	ZS-300-5
	Shaft extension 1/2"	ZS-300-C1
	Shaft extension 3/4"	ZS-300-C2
	Shaft extension 1"	ZS-300-C3
		EF-P
		ZG-120

Electrical installation

Wire colors:
1 = black
2 = red
3 = white
5 = orange

AC/DC 24 V, modulating

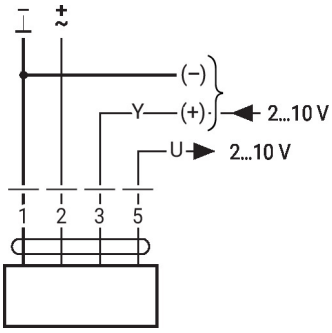

1	2	3		
		2 V		
		10 V		

Signal cable lengths

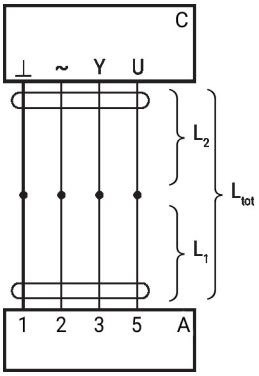

L_2 ⊥ / ~	$L_{tot} = L_1 + L_2$ AC	DC
0.75 mm²	≤30 m	≤5 m
1.00 mm²	≤40 m	≤8 m
1.50 mm²	≤70 m	≤12 m
2.50 mm²	≤100 m	≤20 m

A = Actuator
C = Control unit (controlling unit)
L1 = Connecting cable of the actuator
L2 = Customer cable
Ltot = Maximum signal cable length

Note:
When several actuators are connected in parallel, the maximum signal cable length must be divided by the number of actuators.

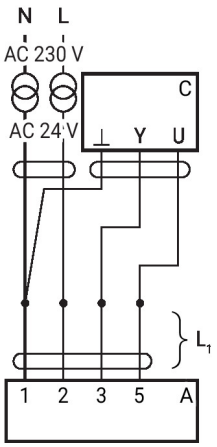

A = Actuator
C = Control unit (controlling unit)
L1 = Connecting cable of the actuator

Note:
There are no special restrictions on installation if the supply and the data cable are routed separately.

Electrical installation

Parallel operation

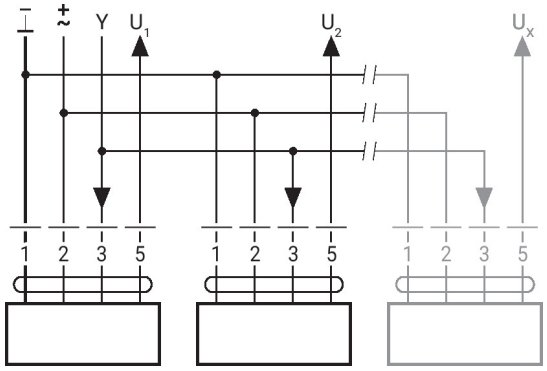

Max. 8 actuators in parallel
Parallel operation is permitted only on non-connected axes
Do not fail to observe performance data with parallel operation

Dimensions

PC

