Basic Non Fail-Safe modulating actuator for controlling dampers in typical commercial HVAC applications.

- **Torque motor 360 in-lb [40 Nm]**
- **Nominal voltage AC/DC 24 V**
- **Control Modulating**
- **Position feedback 2...10 V**



Picture may differ from product

5-year warranty

Technical data

Electrical data	Nominal voltage	AC/DC 24 V
	Nominal voltage frequency	50/60 Hz
	Nominal voltage range	AC 19.2...28.8 V / DC 21.6...28.8 V
	Power consumption in operation	4.5 W
	Power consumption in rest position	2 W
	Transformer sizing	6.5 VA
	Electrical Connection	18 AWG plenum cable with 1/2" NPT conduit connector, degree of protection NEMA 2 / IP54, 1 m, 3 m, and 5 m
	Overload Protection	electronic throughout 0...95° rotation
Functional data	Torque motor	360 in-lb [40 Nm]
	Operating range Y	2...10 V
	Operating range Y note	4...20 mA w/ ZG-R01 (500 Ω, 1/4 W resistor)
	Input impedance	100 kΩ for 2...10 V (0.1 mA), 500 Ω for 4...20 mA
	Position feedback U	2...10 V
	Position feedback U note	Max. 0.5 mA
	Direction of motion motor	selectable with switch 0/1
	Manual override	external push button
	Angle of rotation	Max. 95°
	Angle of rotation note	adjustable with mechanical stop
	Running Time (Motor)	150 s / 90°
	Running time motor note	constant, independent of load
	Sound power level, motor	45 dB(A)
	Position indication	Mechanical
Safety data	Power source UL	Class 2 Supply
	Degree of protection NEMA/UL	NEMA 2
	Housing	UL Enclosure Type 2
	Agency Listing	cULus acc. to UL60730-1A/-2-14, CAN/CSA E60730-1:02 CE acc. to 2014/30/EU and 2014/35/EU
	Quality Standard	ISO 9001
	UL 2043 Compliant	Suitable for use in air plenums per Section 300.22(C) of the NEC and Section 602 of the IMC
	Ambient humidity	Max. 95% RH, non-condensing

Technical data

Safety data	Ambient temperature	-22...122°F [-30...50°C]
	Storage temperature	-40...176°F [-40...80°C]
	Servicing	maintenance-free
Weight	Weight	3.9 lb [1.8 kg]
Materials	Housing material	UL94-5VA

Footnotes †Rated Impulse Voltage 800V, Type action 1, Control Pollution Degree 3.

Product features

Application

For proportional modulation of dampers in HVAC systems. Actuator sizing should be done in accordance with the damper manufacturer's specifications. The actuator is mounted directly to a damper shaft up to 1.05" in diameter by means of its universal clamp. A crank arm and several mounting brackets are available for applications where the actuator cannot be direct coupled to the damper shaft. The actuator operates in response to a 2...10 V, or with the addition of a 500 Ω resistor, a 4...20 mA control input from an electronic controller or positioner. A 2...10 V feedback signal is provided for position indication or primary/secondary operation.

Operation

The actuator is not provided with and does not require any limit switches, but is electronically protected against overload. The anti-rotation strap supplied with the actuator will prevent lateral movement.

The actuator provides 95° of rotation and a visual indicator indicates position of the actuator. When reaching the damper or actuator end position, the actuator automatically stops. The gears can be manually disengaged with a button on the actuator cover.

The actuators use a brushless DC motor, which is controlled by an Application Specific Integrated Circuit (ASIC). The ASIC monitors and controls the actuator's rotation and provides a digital rotation sensing (DRS) function to prevent damage to the actuator in a stall condition. Power consumption is reduced in holding mode.

Add-on auxiliary switches or feedback potentiometers are easily fastened directly onto the actuator body for signaling and switching functions.

For low ambient temperatures, the optional supplemental (-H) Heater add-on is available.

Typical specification

Modulating control damper actuators shall be electronic direct coupled type, which require no crank arm and linkage and be capable of direct mounting to a shaft up to 1.05" diameter. Actuators must provide modulating damper control in response to a 2 to 10 VDC or, with the addition of a 500 Ω resistor, a 4 to 20 mA control input from an electronic controller or positioner. Actuators shall have brushless DC motor technology and be protected from overload at all angles of rotation. Actuators shall have reversing switch and manual override on the cover. Run time shall be constant and independent of torque. Actuators shall be cULus listed, have a 5-year warranty, and be manufactured under ISO 9001 International Quality Control Standards. Actuators shall be as manufactured by Belimo.

Accessories

Electrical accessories

Description	Type
Positioner for wall mounting	SGA24
Auxiliary switch 2x SPDT add-on	S2A
Auxiliary switch 1x SPDT add-on	S1A
Convert Pulse Width Modulated Signal to a 2...10 V Signal for Belimo Proportional Actuators	PTA-250
Signal simulator, Power supply AC 120 V	PS-100
Feedback potentiometer 1 kΩ add-on, grey	P1000A GR
	IRM-100
Positioner for front-panel mounting	SGF24
	ZS-T
Resistor, 500 Ω, 1/4" wire resistor with 6" pigtail wires	ZG-R01
Transformer, AC 120 V to AC 24 V, 40 VA	ZG-X40

Accessories

Mechanical accessories	Description	Type
		K-GM20
		ZG-102
	Baseplate extension for GM..A to GM..	Z-GMA
	Mounting kit for linkage operation for flat installation	ZG-GMA
		ZG-JSA-1
	Weather shield 13x8x6" [330x203x152 mm] (LxWxH)	ZS-100
	Weather shield 406x213x102 mm [16x8-3/8x4"] (LxWxH)	ZS-150
	Explosion proof housing 16x10x6.435" [406x254x164 mm] (LxWxH), UL and CSA, Class I, Zone 1&2, Groups B, C, D, (NEMA 7), Class III, Hazardous (classified) Locations	ZS-260
	Weather shield 17-1/4x8-3/4x5-1/2" [438x222x140 mm] (LxWxH), NEMA 4X, with mounting brackets	ZS-300
	Wrench 0.512 in. [13 mm]	TOOL-07

Electrical installation

Wire colors:
1 = black
2 = red
3 = white
5 = orange

AC/DC 24 V, modulating

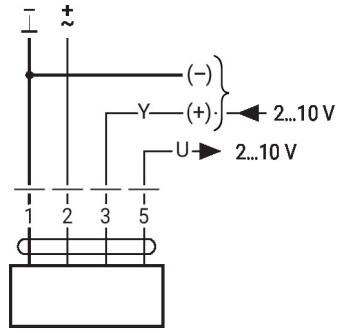

1	2	3	0 1	0 1
		2 V		
		10 V		

Dimensions

PC

⌀ 1/2" to 1.05" [12.7 to 26.67]

□ 2/5" to 1.05" [10 to 26.67]

