Customizable Non Fail-Safe actuator for controlling dampers in typical commercial HVAC applications.

- **Torque motor 360 in-lb [40 Nm]**
- **Nominal voltage AC 100...240 V**
- **Control On/Off, Floating point**



Picture may differ from product

5-year warranty

Technical data

Electrical data	Nominal voltage	AC 100...240 V
	Nominal voltage frequency	50/60 Hz
	Nominal voltage range	AC 85...265 V
	Power consumption in operation	4 W
	Power consumption in rest position	2 W
	Transformer sizing	7 VA
	Electrical Connection	18 AWG appliance cable, 1 m, 3 m or 5 m, with 1/2" NPT conduit connector, degree of protection NEMA 2 / IP54
	Overload Protection	electronic throughout 0...95° rotation
Functional data	Torque motor	360 in-lb [40 Nm]
	Direction of motion motor	selectable with switch 0/1
	Manual override	external push button
	Angle of rotation	Max. 95°
	Angle of rotation note	adjustable with mechanical stop
	Running Time (Motor)	150 s / 90°
	Running time motor note	constant, independent of load
	Sound power level, motor	45 dB(A)
	Position indication	Mechanical
Safety data	Power source UL	Class 2 Supply
	Degree of protection NEMA/UL	NEMA 2
	Housing	UL Enclosure Type 2
	Agency Listing	cULus acc. to UL60730-1A/-2-14, CAN/CSA E60730-1:02 CE acc. to 2014/30/EU and 2014/35/EU
	Quality Standard	ISO 9001
	UL 2043 Compliant	Suitable for use in air plenums per Section 300.22(C) of the NEC and Section 602 of the IMC
	Ambient humidity	Max. 95% RH, non-condensing
	Ambient temperature	-22...122°F [-30...50°C]
	Storage temperature	-40...176°F [-40...80°C]
	Servicing	maintenance-free
Weight	Weight	3.6 lb [1.6 kg]
Materials	Housing material	UL94-5VA

Technical data

Footnotes †Rated Impulse Voltage 800V, Type action 1, Control Pollution Degree 3.

Product features

Application

For on/off and floating point control of dampers in HVAC systems. Actuator sizing should be done in accordance with the damper manufacturer's specifications.

The actuator is mounted directly to a damper shaft up to 1.05" in diameter by means of its universal clamp. A crank arm and several mounting brackets are available for applications where the actuator cannot be direct coupled to the damper shaft.

Operation

The actuator is not provided with and does not require any limit switches, but is electronically protected against overload. The anti-rotation strap supplied with the actuator will prevent lateral movement.

The GMX series provides 95° of rotation and a visual indicator indicates position of the actuator. When reaching the damper or actuator end position, the actuator automatically stops. The gears can be manually disengaged with a button on the actuator cover.

The GMX120-3 actuators use a sensorless brushless DC motor, which is controlled by an Application Specific Integrated Circuit (ASIC). The ASIC monitors and controls the actuator's rotation and provides a digital rotation sensing (DRS) function to prevent damage to the actuator in a stall condition. Power consumption is reduced in holding mode.

Add-on auxiliary switches or feedback potentiometers are easily fastened directly onto the actuator body for signaling and switching functions.

Typical specification

Floating point, on/off control damper actuators shall be electronic direct-coupled type, which require no crank arm and linkage and be capable of direct mounting to a shaft up to 1.05" diameter. Actuators shall have brushless DC motor technology and be protected from overload at all angles of rotation. Actuators shall have reversing switch and manual override on the cover. If required, actuators will be provided with a screw terminal strip for electrical connections (NMX24-3-T). Run time shall be constant and independent of torque. Actuators shall be cULus listed, have a 5-year warranty, and be manufactured under ISO 9001 International Quality Control Standards. Actuators shall be as manufactured by Belimo.

Accessories

Tools

Description	Type
Service tool for wired and wireless setup, on-site operation and troubleshooting.	Belimo Assistant 2
Connecting cable 16 ft [5 m], A: RJ11 6/4 LINK.10, B: 6-pin for connection to service socket	ZK1-GEN
Connecting cable 16 ft [5 m], A: RJ11 6/4 LINK.10, B: free wire end for connection to MP/PP terminal	ZK2-GEN
Connecting cable 16 ft [5 m], A+B: RJ12 6/6	ZK6-GEN

Electrical accessories

Description	Type
Cable conduit connector 1/2"	TF-CC US
	ZS-T

Mechanical accessories

Description	Type
Actuator arm for standard shaft clamp	AH-GMA
Shaft extension 240 mm ø20 mm for damper shaft ø8...22.7 mm	AV8-25
Ball joint suitable for damper crank arm KH8	KG8
	K-GM20
Push rod for KG10A ball joint L 36", 3/8" diameter	SH10
	SH8
Wrench 0.512 in. [13 mm]	TOOL-07
Mounting bracket for AF..	ZG-100
Mounting bracket for AF / NF	ZG-101
	ZG-102
Mounting bracket	ZG-103
Mounting bracket	ZG-104

Accessories

Description	Type
Mounting bracket	ZG-109
Linkage kit	ZG-110
	ZG-DC1
	ZG-DC2
Mounting kit for linkage operation for flat installation	ZG-GMA
Baseplate extension for GM..A to GM..	Z-GMA
Weather shield 13x8x6" [330x203x152 mm] (LxWxH)	ZS-100
Baseplate, for ZS-100	ZS-101
Weather shield 406x213x102 mm [16x8-3/8x4"] (LxWxH)	ZS-150
Explosion proof housing 16x10x6.435" [406x254x164 mm] (LxWxH), UL and CSA, Class I, Zone 1&2, Groups B, C, D, (NEMA 7), Class III, Hazardous (classified) Locations	ZS-260
Weather shield 17-1/4x8-3/4x5-1/2" [438x222x140 mm] (LxWxH), NEMA 4X, with mounting brackets	ZS-300
Weather shield 17-1/4x8-3/4x5-1/2" [438x222x140 mm] (LxWxH), NEMA 4X, with mounting brackets	ZS-300-5
Shaft extension 1/2"	ZS-300-C1
Shaft extension 3/4"	ZS-300-C2
Shaft extension 1"	ZS-300-C3

Electrical installation

Wire colors:
1 = blue
2 = brown
3 = white

AC 230 V, on/off

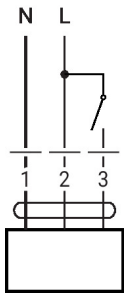

AC 230 V, on/off (two-wire)

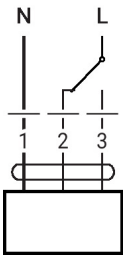

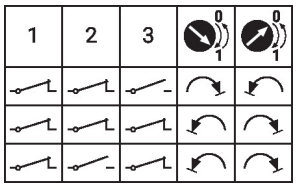

Dimensions

PC

⌀ 1/2" to 1.05" [12.7 to 26.67]

□ 2/5" to 1.05" [10 to 26.67]

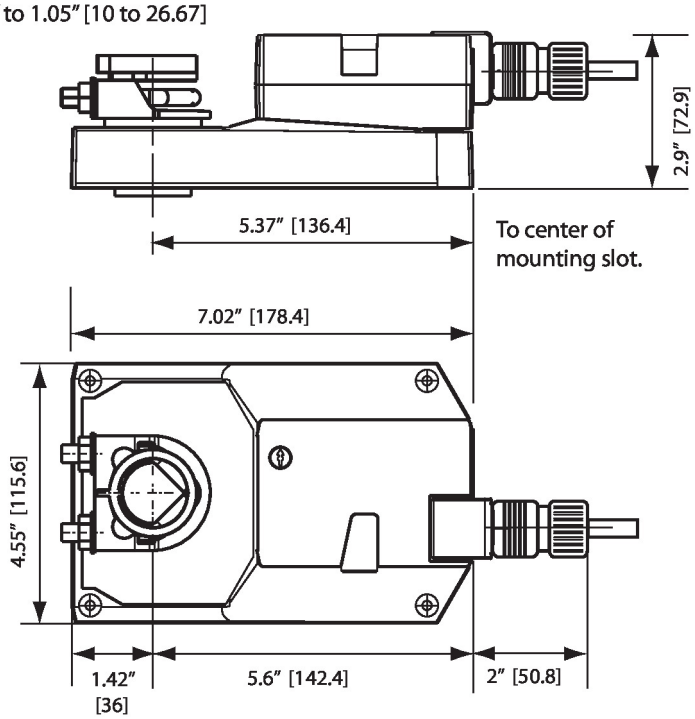

Further documentation

• Quick Guide – Belimo Assistant 2