Technical data sheet LHX24-3-100

Customizable Non Fail-Safe actuator for controlling dampers in typical commercial HVAC applications.

- **Actuating force motor 150 N [35 lbf]**
- **Nominal voltage AC/DC 24 V**
- **Control On/Off, Floating point**



Picture may differ from product

5-year warranty

Technical data

Electrical data	Nominal voltage	AC/DC 24 V
	Nominal voltage frequency	50/60 Hz
	Nominal voltage range	AC 19.2...28.8 V / DC 19.2...28.8 V
	Power consumption in operation	1.5 W
	Power consumption in rest position	0.5 W
	Transformer sizing	3 VA
	Electrical Connection	18 AWG plenum cable with 1/2" NPT conduit connector, degree of protection NEMA 2 / IP54, 1 m, 3 m, and 5 m
	Overload Protection	electronic throughout full stroke
Functional data	Actuating force motor	150 N [35 lbf]
	Direction of motion motor	reversible with switch
	Manual override	external push button
	Stroke	4" [100 mm]
	Running Time (Motor)	150 s / 100 mm
	Sound power level, motor	35 dB(A)
	Position indication	Mechanical
Safety data	Power source UL	Class 2 Supply
	Degree of protection NEMA/UL	NEMA 2
	Housing	UL Enclosure Type 2
	Agency Listing	cULus acc. to UL60730-1A/-2-14, CAN/CSA E60730-1:02 CE acc. to 2014/30/EU and 2014/35/EU
	Quality Standard	ISO 9001
	UL 2043 Compliant	Suitable for use in air plenums per Section 300.22(C) of the NEC and Section 602 of the IMC
	Ambient humidity	Max. 95% RH, non-condensing
	Ambient temperature	-22...122°F [-30...50°C]
	Storage temperature	-40...176°F [-40...80°C]
	Servicing	maintenance-free
Weight	Weight	1.0 lb [0.47 kg]
Materials	Housing material	UL94-5VA

Footnotes †Rated Impulse Voltage 4kV, Type of Action 1.AA.B, Control Pollution Degree 3.

Product features

Application

For on/off and floating point control of dampers in HVAC systems. Actuator sizing should be done in accordance with the damper manufacturer's specifications.

Operation

The actuator is not provided with and does not require any limit switches, but is electronically protected against overload. The anti-rotation strap supplied with the actuator will prevent lateral movement.

The LHB(X)24-3... series provides 4, 8, or 12 in of linear force. The stroke of the gear rack can be adjusted on both sides in increments of 0.8 in [20 mm] by means of the mechanical end stops.

When reaching the damper or actuator end position, the actuator automatically stops.

The gears can be manually disengaged with a button on the actuator cover.

The LHB(X)24-3.. actuators use a sensorless brushless DC motor, which is controlled by an Application Specific Integrated Circuit (ASIC). The ASIC monitors and controls the actuator's rotation and provides a digital rotation sensing (DRS) function to prevent damage to the actuator in a stall condition. Power consumption is reduced in holding mode.

Typical specification

Floating point, on/off control damper actuators shall be electronic type, with integrated linear stroking arm. Actuators shall have brushless DC motor technology and be protected from overload at all positions of linear stroke. Actuators shall have reversing switch and manual override on the cover. Run time shall be constant and independent of torque. Actuators shall be cUL listed, have a 5-year warranty, and be manufactured under ISO 9001 International Quality Control Standards. Actuators shall be as manufactured by Belimo.

Accessories

Electrical accessories

Description	Type
Signal simulator, Power supply AC 120 V	PS-100
Transformer, AC 120 V to AC 24 V, 40 VA	ZG-X40
Cable conduit connector 1/2"	TF-CC US
	ZS-T

Mechanical accessories

Description	Type
Ball joint suitable for damper crank arm KH8 / KH10	KG10A
Ball joint suitable for damper crank arm KH8	KG6
Ball joint suitable for damper crank arm KH8	KG8
	SH8
Rotary support, for linear actuator, for compensation of transverse forces	Z-DS1
	Z-KSC
	ZG-119

Electrical installation

Wire colors:
1 = black
2 = red
3 = white

AC/DC 24 V, on/off

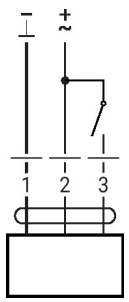

AC/DC 24 V, 3-point

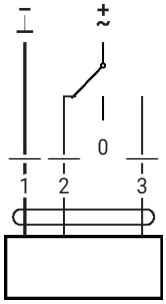

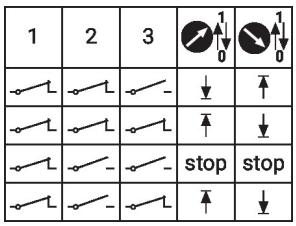

Dimensions

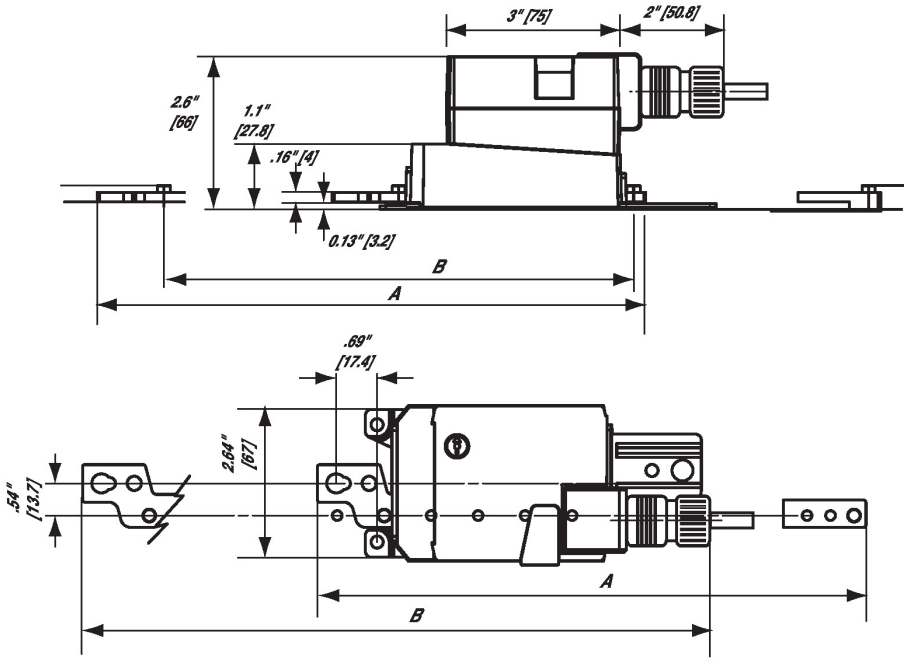

Stroke	A	B
4" [100]	9.2" [233.5]	10.4" [264.2]
8" [200]	13.1" [333.5]	14.3" [364.2]
12" [300]	17.1" [433.5]	18.3" [464.2]