Basic Non Fail-Safe multifunction technology actuator for controlling dampers in typical commercial HVAC applications.

- **Torque motor 45 in-lb [5 Nm]**
- **Nominal voltage AC/DC 24 V**
- **Control MFT/programmable**
- **Position feedback 2...10 V**



Picture may differ from product

5-year warranty

MFT

Technical data

Electrical data	Nominal voltage	AC/DC 24 V
	Nominal voltage frequency	50/60 Hz
	Nominal voltage range	AC 19.2...28.8 V / DC 21.6...28.8 V
	Power consumption in operation	2.5 W
	Power consumption in rest position	1.2 W
	Transformer sizing	5 VA
	Electrical connection	18 AWG plenum cable with 1/2" NPT conduit connector, degree of protection NEMA 2 / IP54, 1 m, 3 m, and 5 m
	Overload Protection	electronic throughout 0...95° rotation
Functional data	Torque motor	45 in-lb [5 Nm]
	Operating range Y	2...10 V
	Operating range Y note	4...20 mA w/ ZG-R01 (500 Ω, 1/4 W resistor)
	Input impedance	100 kΩ for 2...10 V (0.1 mA), 500 Ω for 4...20 mA, 1500 Ω for PWM, On/Off and Floating point
	Operating range Y variable	Start point 0.5...30 V End point 2.5...32 V
	Operating modes optional	variable (VDC, on/off, floating point)
	Position feedback U	2...10 V
	Position feedback U note	Max. 0.5 mA
	Position feedback U variable	VDC variable
	Direction of motion motor	selectable with switch 0/1
	Manual override	external push button
	Angle of rotation	Max. 95°
	Angle of rotation note	adjustable with mechanical stop
	Running Time (Motor)	95 s / 90°
	Running time motor variable	35...150 s
	Sound power level motor	35 dB(A)
	Position indication	Mechanical
Safety data	Power source UL	Class 2 Supply
	Degree of protection NEMA/UL	NEMA 2
	Housing	UL Enclosure Type 2
	Agency Listing	cULus acc. to UL60730-1A/-2-14, CAN/CSA E60730-1:02 CE acc. to 2014/30/EU and 2014/35/EU
	Quality Standard	ISO 9001

Technical data

Safety data	UL 2043 Compliant	Suitable for use in air plenums per Section 300.22(C) of the NEC and Section 602 of the IMC
	Ambient humidity	Max. 95% RH, non-condensing
	Ambient temperature	-22...122°F [-30...50°C]
	Storage temperature	-40...176°F [-40...80°C]
	Servicing	maintenance-free
Weight	Weight	1.2 lb [0.55 kg]
Materials	Housing material	UL94-5VA

Product features

Application

For proportional modulation of dampers in HVAC systems. Actuator sizing should be done in accordance with the damper manufacturer's specifications. The actuator is mounted directly to a damper shaft from 1/4" up to 5/8" in diameter by means of its universal clamp. Shafts up to 3/4" diameter can be accommodated by an accessory clamp.

The default parameters for 2...10 V applications of the ..MFT actuator are assigned during manufacturing. If necessary, custom versions of the actuators can be ordered. The parameters can be changed by two means: pre-set and custom configurations from Belimo or on-site configurations using the Belimo PC-Tool software.

Operation

The actuator is not provided with and does not require any limit switches, but is electronically protected against overload. The anti-rotation strap supplied with the actuator will prevent lateral movement.

The LMB(X) series provides 95° of rotation and a visual indicator indicates position of the actuator. When reaching the damper or actuator end position, the actuator automatically stops. The gears can be manually disengaged with a button on the actuator cover.

The LMB(X)24-MFT... actuators use a brushless DC motor, which is controlled by an Application Specific Integrated Circuit (ASIC). The ASIC monitors and controls the actuator's rotation and provides a digital rotation sensing (DRS) function to prevent damage to the actuator in a stall condition. Power consumption is reduced in holding mode.

Add-on auxiliary switches or feedback potentiometers are easily fastened directly onto the actuator body for signaling and switching functions.

Typical specification

Proportional control damper actuators shall be electronic direct-coupled type, which require no crank arm and linkage and be capable of direct mounting to a shaft from 1/4" to 5/8" diameter. Actuators must provide contorl in response to a control input from an electronic controller or positioner. Actuators shall have brushless DC motor technology and be protected from overload at all angles of rotation. Actuators shall have reversing switch and manual override on the cover. Run time shall be constant and independent of torque. Actuators shall be cULus listed, have a 5-year warranty, and be manufactured under ISO 9001 International Quality Control Standards. Actuators shall be as manufactured by Belimo.

Accessories

Tools

Description	Type
Signal simulator, Power supply AC 120 V	PS-100
Connecting cable 16 ft [5 m], A: RJ11 6/4 LINK.10, B: 6-pin for connection to service socket	ZK1-GEN
Connecting cable 10 ft [3 m], A: RJ11 6/4 LINK.10, B: 3-pin Weidmüller and supply connection	ZK4-GEN
Service tool, with ZIP-USB function, for configurable and communicative Belimo actuators, VAV controller and HVAC performance devices	ZTH US

Electrical accessories

Description	Type
Auxiliary switch 1x SPDT add-on	S1A
Auxiliary switch 2x SPDT add-on	S2A
Auxiliary switch, mercury-free	P475

Accessories

	Description	Type
	Auxiliary switch, mercury-free	P475-1
	Feedback potentiometer 140 Ω add-on, grey	P140A GR
	Feedback potentiometer 500 Ω add-on, grey	P500A GR
	Feedback potentiometer 1 kΩ add-on, grey	P1000A GR
	Feedback potentiometer 2.8 kΩ add-on, grey	P2800A GR
	Feedback potentiometer 5 kΩ add-on, grey	P5000A GR
	Feedback potentiometer 10 kΩ add-on, grey	P10000A GR
	Feedback potentiometer 15 kΩ gray	P15000A-F GR
	Transformer, AC 120 V to AC 24 V, 40 VA	ZG-X40
	Cable conduit connector 1/2"	TF-CC US
	Cable Gland	43442-00001
	(NEMA 4 models)	
	Positioner for wall mounting	SGA24
	Positioner for front-panel mounting	SGF24
		IRM-100
	Resistor, 500 Ω, 1/4" wire resistor with 6" pigtail wires	ZG-R01
		ZS-T

Gateways	Description	Type
	Gateway MP to BACnet MS/TP	UK24BAC
	Gateway MP to Modbus RTU	UK24MOD
	Gateway MP to LonWorks	UK24LON

Mechanical accessories	Description	Type
	Damper crank arm Slot width 6.2 mm, clamping range ø10...18 mm [3/8...3/4"]	KH6
	Damper crank arm Slot width 8.2 mm, clamping range ø10...18 mm [3/8...3/4"]	KH8
	Damper crank arm Slot width 8.2 mm, clamping range ø14...25 mm [1/2...1"]	KH10
	Damper crank arm Slot width 8.2 mm, for ø1.05"	KH12
	Ball joint suitable for damper crank arm KH8	KG6
	Ball joint suitable for damper crank arm KH8	KG8
	Ball joint suitable for damper crank arm KH8 / KH10	KG10A
		SH8
	Push rod for KG10A ball joint L 36", 3/8" diameter	SH10
		ZG-DC1
		ZG-DC2
	Weather shield 13x8x6" [330x203x152 mm] (LxWxH)	ZS-100
	Baseplate, for ZS-100	ZS-101
	Weather shield 406x213x102 mm [16x8-3/8x4"] (LxWxH)	ZS-150
	Shaft extension 240 mm ø20 mm for damper shaft ø8...22.7 mm	AV8-25
		TF-P
	Mounting bracket for AF..	ZG-100
	Mounting bracket for AF / NF	ZG-101
	Wrench 0.32 in and 0.39 in [8 mm and 10 mm]	TOOL-06
	Adapter for auxiliary switch and feedback potentiometer, Multipack 20 pcs.	Z-SPA
		K-LM10
		K-LM12
		K-LM16
		K-LM20
		ZG-LMSA
		ZG-LMSA-1
		ZG-LMSA-1/2-5
	Shaft extension 170 mm ø10 mm for damper shaft ø6...16 mm	AV6-20
		ZG-SGF

Electrical installation

Wire colors:
1 = black
2 = red
3 = white
4 = pink
5 = orange

AC/DC 24 V, modulating

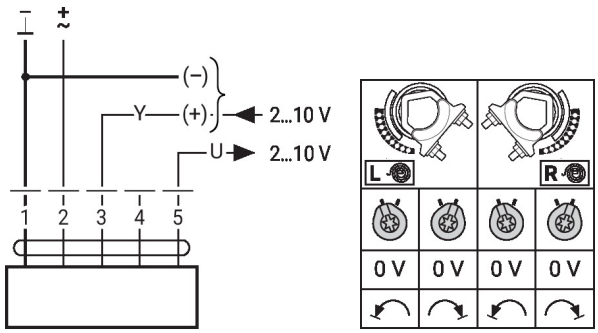

Further electrical installations

Functions with basic values (conventional mode)

Override control with AC 24 V with relay contacts

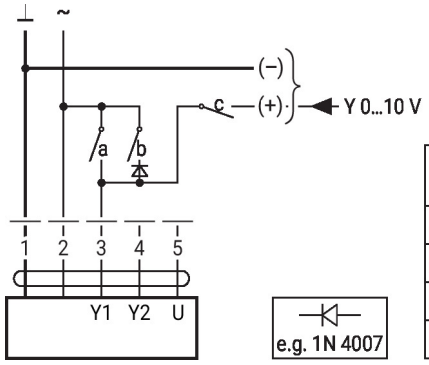

1	2	a	b	c	
					0 %
					ZS 50%
					100%
					Y

Override control with AC 24 V with rotary switch

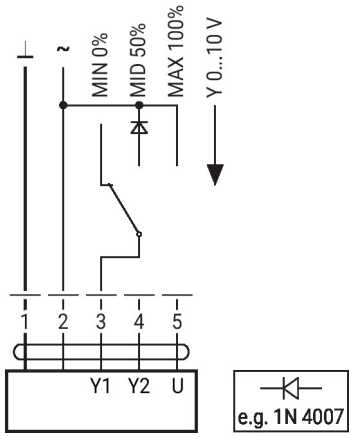

Control remotely 0...100% with positioner SG..

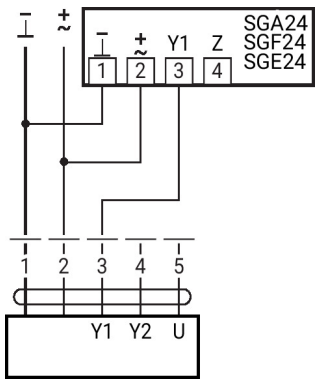

Further electrical installations

Functions with basic values (conventional mode)

Minimum limit with positioner SG..

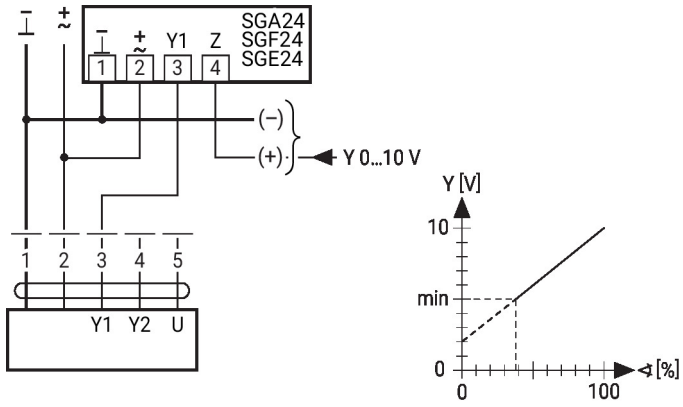

Primary/secondary operation (position-dependent)

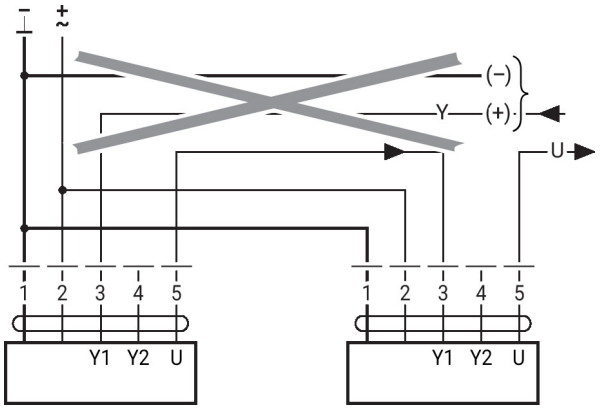

Control with 4...20 mA via external resistor

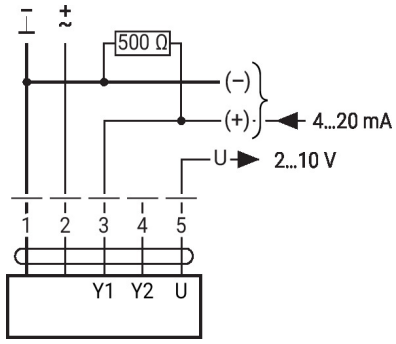

Functional check

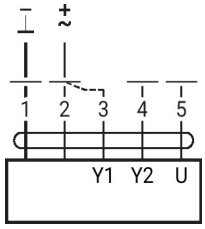

Procedure

1. Apply 24 V to connection 1 and 2
2. Disconnect connection 3:
- with upwards direction of motion: closing point at top
- with downwards direction of motion: closing point at bottom
3. Short circuit connections 2 and 3:
- Actuator runs in the opposite direction

Functions with specific parameters (configuration necessary)

Override control and limiting with AC 24 V with relay contacts

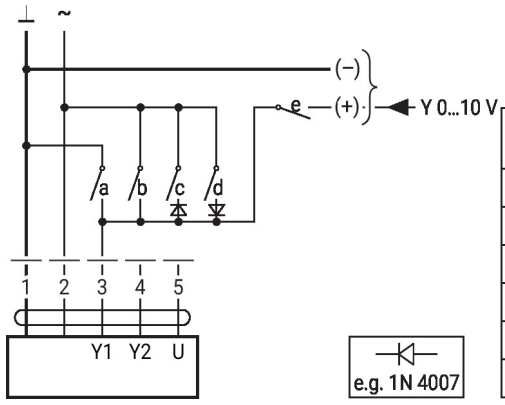

1	2	a	b	c	d	e	
							Close[1)]
							MIN
							ZS
							MAX
							Open
							Y

Control on/off

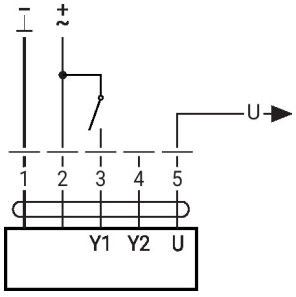

Further electrical installations

Functions with specific parameters (configuration necessary)

Control floating point

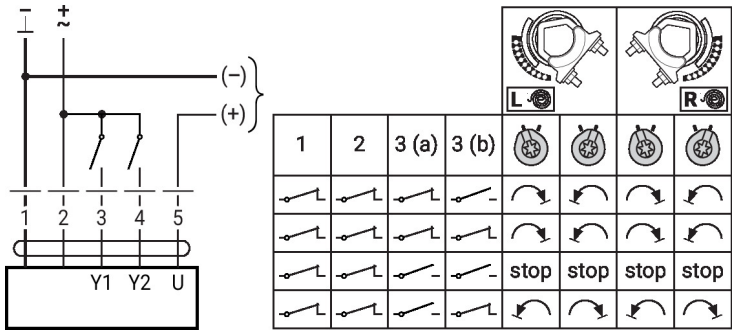

Override control and limiting with AC 24 V with rotary switch

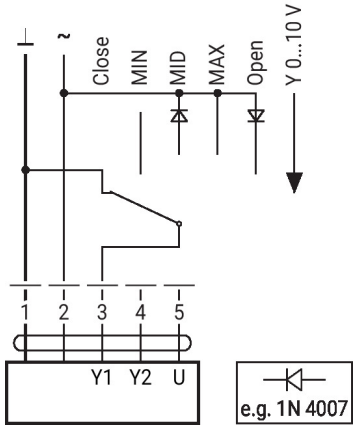

Caution:
The "Close" function is only guaranteed if the start point of the operating range is defined as min. 0.5 V.

Dimensions

PC

