Customizable Fail-Safe multifunction technology actuator for controlling dampers in typical commercial HVAC applications.

- **Torque motor 90 in-lb [10 Nm]**
- **Nominal voltage AC/DC 24 V**
- **Control MFT/programmable**
- **Position feedback 2...10 V**
- **2x SPDT**



Picture may differ from product

5-year warranty

LISTED 94 D5 TEMP. IND. & REG. EQUIP.

BRUSHLESS dc motor

MFT

Technical data

Electrical data	Nominal voltage	AC/DC 24 V
	Nominal voltage frequency	50/60 Hz
	Nominal voltage range	AC 19.2...28.8 V / DC 21.6...28.8 V
	Power consumption in operation	6.5 W
	Power consumption in rest position	3 W
	Transformer sizing	9 VA
	Auxiliary switch	2x SPDT, 1 mA...3 A (0.5 A inductive), DC 5 V...AC 250 V, 1x 10% / 1x 11...90%
	Switching capacity auxiliary switch	1 mA...3 A (0.5 A inductive), DC 5 V...AC 250 V
	Electrical connection	(2) 18 AWG appliance cables, 1 m, 3 m or 5 m, with or without 1/2" NPT conduit connectors
	Overload Protection	electronic throughout 0...95° rotation
	Electrical Protection	actuators are double insulated
Functional data	Torque motor	90 in-lb [10 Nm]
	Operating range Y	2...10 V
	Operating range Y note	4...20 mA w/ ZG-R01 (500 Ω, 1/4 W resistor)
	Input impedance	100 kΩ for 2...10 V (0.1 mA), 500 Ω for 4...20 mA, 1500 Ω for PWM, On/Off and Floating point
	Operating range Y variable	Start point 0.5...30 V End point 2.5...32 V
	Operating modes optional	variable (VDC, PWM, on/off, floating point)
	Position feedback U	2...10 V
	Position feedback U note	Max. 0.5 mA
	Position feedback U variable	VDC variable
	Direction of motion motor	selectable with switch 0/1
	Direction of motion fail-safe	reversible with cw/ccw mounting
	Manual override	5 mm hex crank (3/16" Allen), supplied
	Angle of rotation	95°
	Angle of rotation note	adjustable with mechanical end stop, 35...95°
	Running Time (Motor)	150 s / 90°
	Running time motor variable	40...150 s
	Running time fail-safe	<20 s @ -20...50°C, <60 s @ -30°C
	Sound power level motor	40 dB(A)

Technical data

Functional data	Sound power level, fail-safe	62 dB(A)
	Adaptation Setting Range	off (default)
	Override control	MIN (minimum position) = 0% MID (intermediate position) = 50% MAX (maximum position) = 100%
	Position indication	Mechanical
Safety data	Power source UL	Class 2 Supply
	Degree of protection NEMA/UL	NEMA 2
	Housing	UL Enclosure Type 2
	Agency Listing	cULus acc. to UL60730-1A/-2-14, CAN/CSA E60730-1:02 CE acc. to 2014/30/EU and 2014/35/EU
	Quality Standard	ISO 9001
	UL 2043 Compliant	Suitable for use in air plenums per Section 300.22(C) of the NEC and Section 602 of the IMC
	Ambient humidity	Max. 95% RH, non-condensing
	Ambient temperature	-22...122°F [-30...50°C]
	Storage temperature	-40...176°F [-40...80°C]
	Servicing	maintenance-free
Weight	Weight	4.9 lb [2.2 kg]
Materials	Housing material	UL94-5VA

Footnotes

*Variable when configured with MFT options.

†Rated Impulse Voltage 800V, Type of Action 1.AA.B, Control Pollution Degree 3.

Product features

Default/Configuration

Default parameters for 2 to 10 VDC applications of the NF..-MFT actuator are assigned during manufacturing. If required, custom versions of the actuator can be ordered. The parameters are variable and can be changed by three means: Factory pre-set or custom configuration, set by the customer using PC-Tool software or the handheld ZTH US.

Application

For fail-safe, modulating control of dampers in HVAC systems. Actuator sizing should be done in accordance with the damper manufacturer's specifications. A feedback signal is provided for position indication.

Product features

Operation

The NF..24-MFT actuator provides 95° of rotation and is provided with a graduated position indicator showing 0° to 95°. The actuator will synchronize the 0° mechanical stop or the physical damper or valve mechanical stop and use this point for its zero position during normal control operations. A unique manual override allows the setting of any actuator position within its 95° of rotation with no power applied. This mechanism can be released physically by the use of a crank supplied with the actuator. When power is applied the manual override is released and the actuator drives toward the fail-safe position. The actuator uses a brushless DC motor which is controlled by an Application Specific Integrated Circuit (ASIC) and a microprocessor. The microprocessor provides the intelligence to the ASIC to provide a constant rotation rate and to know the actuators's exact position. The ASIC monitors and controls the brushless DC motor's rotation and provides a Digital Rotation Sensing (DRS) function to prevent damage to the actuator in a stall condition. The position feedback signal is generated without the need for mechanical feedback potentiometers using DRS. The actuator may be stalled anywhere in its normal rotation without the need of mechanical end switches. The NF..24-MFT is mounted directly to control shafts up to 1.05" diameter by means of its universal clamp and anti-rotation bracket. A crank arm and several mounting brackets are available for damper applications where the actuator cannot be direct coupled to the damper shaft. The spring return system provides minimum specified torque to the application during a power interruption. The NF..24-MFT actuator is shipped at 5° (5° from full fail-safe) to provide automatic compression against damper gaskets for tight shut-off.

Typical specification

Spring return control damper actuators shall be direct coupled type which require no crank arm and linkage and be capable of direct mounting to a jackshaft up to a 1.05” diameter. The actuator must provide modulating damper control in response to a 2 to 10 VDC or, with the addition of a 500Ω resistor, a 4 to 20 mA control input from an electronic controller or positioner. The actuators must be designed so that they may be used for either clockwise or counter clockwise fail-safe operation. Actuators shall use a brushless DC motor controlled by a microprocessor and be protected from overload at all angles of rotation. Run time shall be constant, and independent of torque. A 2 to 10 VDC feedback signal shall be provided for position feedback. Actuators shall be cULus listed and have a 5 year warranty, and be manufactured under ISO 9001 International Quality Control Standards. Actuators shall be as manufactured by Belimo.

Factory settings

Default parameters for 2 to 10 VDC applications of the NF..-MFT actuator are assigned during manufacturing. If required, custom versions of the actuator can be ordered. The parameters are variable and can be changed by three means: Factory pre-set or custom configuration, set by the customer using PC-Tool software or the handheld ZTH US.

Accessories

Tools

Description	Type
Connecting cable 16 ft [5 m], A: RJ11 6/4 LINK.10, B: free wire end for connection to MP/PP terminal	ZK2-GEN
Connecting cable 10 ft [3 m], A: RJ11 6/4 LINK.10, B: 3-pin Weidmüller and supply connection	ZK4-GEN
Service tool, with ZIP-USB function, for configurable and communicative Belimo actuators, VAV controller and HVAC performance devices	ZTH US
Service tool for wired and wireless setup, on-site operation and troubleshooting.	Belimo Assistant 2
Signal simulator, Power supply AC 120 V	PS-100

Electrical accessories

Description	Type
	IRM-100
Auxiliary switch, mercury-free	P475
Auxiliary switch, mercury-free	P475-1
Convert Pulse Width Modulated Signal to a 2...10 V Signal for Belimo Proportional Actuators	PTA-250
Positioner for wall mounting	SGA24
Positioner for front-panel mounting	SGF24
Cable conduit connector 1/2"	TF-CC US
Gateway MP to BACnet MS/TP	UK24BAC
Gateway MP to LonWorks	UK24LON
Gateway MP to Modbus RTU	UK24MOD

Accessories

	Description	Type
	Resistor, 500 Ω, 1/4" wire resistor with 6" pigtail wires	ZG-R01
	Resistor kit, 50% voltage divider	ZG-R02
	Transformer, AC 120 V to AC 24 V, 40 VA	ZG-X40
Gateways	**Description**	**Type**
	Gateway MP to BACnet MS/TP	UK24BAC
	Gateway MP to Modbus RTU	UK24MOD
	Gateway MP to LonWorks	UK24LON
Mechanical accessories	**Description**	**Type**
	Anti-rotation bracket, for AF / NF	AF-P
	Shaft extension 240 mm ø20 mm for damper shaft ø8...22.7 mm	AV8-25
	End stop indicator	IND-AFB
	Shaft clamp reversible, for central mounting, for damper shafts ø12.7 / 19.0 / 25.4 mm	K7-2
	Ball joint suitable for damper crank arm KH8 / KH10	KG10A
	Ball joint suitable for damper crank arm KH8	KG8
	Damper crank arm Slot width 8.2 mm, clamping range ø14...25 mm [1/2...1"]	KH10
	Damper crank arm Slot width 8.2 mm, for ø1.05"	KH12
	Damper crank arm Slot width 8.2 mm, clamping range ø10...18 mm [3/8...3/4"]	KH8
	Actuator arm, for 3/4" shafts, clamping range ø10...22 mm [3/8...7/8"], Slot width 8.2 mm	KH-AFB
	Push rod for KG10A ball joint L 36", 3/8" diameter	SH10
		SH8
	Wrench 0.32 in and 0.39 in [8 mm and 10 mm]	TOOL-06
	Baseplate extension	Z-AF
	Mounting bracket for AF..	ZG-100
	Mounting bracket for AF / NF	ZG-101
	Mounting bracket	ZG-109
	Linkage kit	ZG-110
	Mounting bracket for AF / NF	ZG-118
		ZG-120
	Mounting kit for linkage operation for flat and side installation	ZG-AFB
	Mounting kit for foot mount installation	ZG-AFB118
		ZG-DC1
		ZG-DC2
		ZG-JSA-1
		ZG-JSA-2
		ZG-JSA-3
	Weather shield 13x8x6" [330x203x152 mm] (LxWxH)	ZS-100
	Baseplate, for ZS-100	ZS-101
	Weather shield 406x213x102 mm [16x8-3/8x4"] (LxWxH)	ZS-150
	Explosion proof housing 16x10x6.435" [406x254x164 mm] (LxWxH), UL and CSA, Class I, Zone 1&2, Groups B, C, D, (NEMA 7), Class III, Hazardous (classified) Locations	ZS-260
	Weather shield 17-1/4x8-3/4x5-1/2" [438x222x140 mm] (LxWxH), NEMA 4X, with mounting brackets	ZS-300
	Weather shield 17-1/4x8-3/4x5-1/2" [438x222x140 mm] (LxWxH), NEMA 4X, with mounting brackets	ZS-300-5
	Shaft extension 1/2"	ZS-300-C1
	Shaft extension 3/4"	ZS-300-C2
	Shaft extension 1"	ZS-300-C3
	Baseplate extension	Z-SF
	Linkage kit	ZG-JSL
	Jackshaft RetroFIT+ Linkage with Belimo Rotary Actuators	

Electrical installation

Wire colors:
1 = black
2 = red
3 = white
4 = pink
5 = orange

AC/DC 24 V, modulating

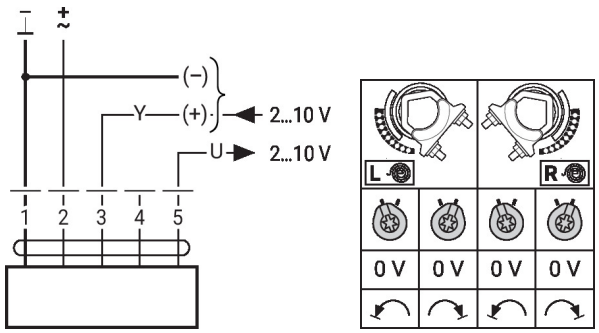

Auxiliary switch

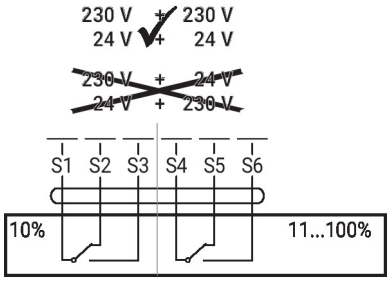

Further electrical installations

Functions with basic values (conventional mode)

Override control with AC 24 V with relay contacts

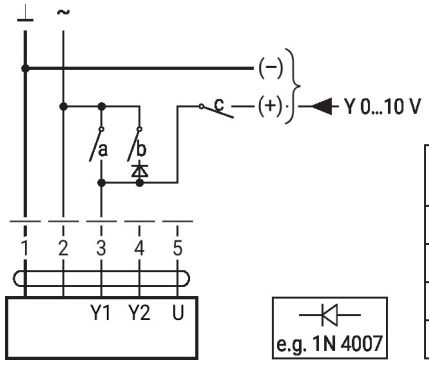

1	2	a	b	c	
					0 %
					ZS 50%
					100%
					Y

Override control with AC 24 V with rotary switch

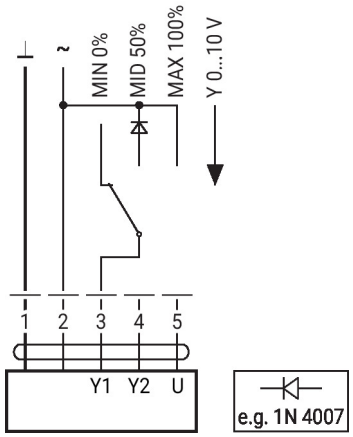

Control remotely 0...100% with positioner SG..

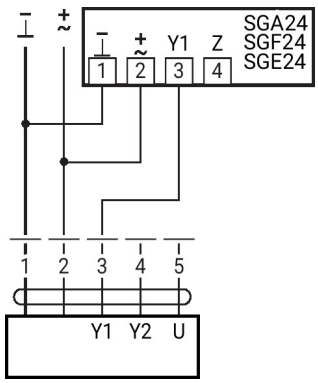

Further electrical installations

Functions with basic values (conventional mode)

Minimum limit with positioner SG..

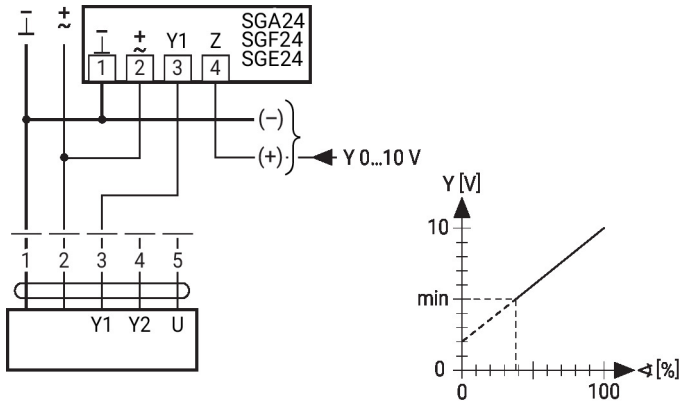

Primary/secondary operation (position-dependent)

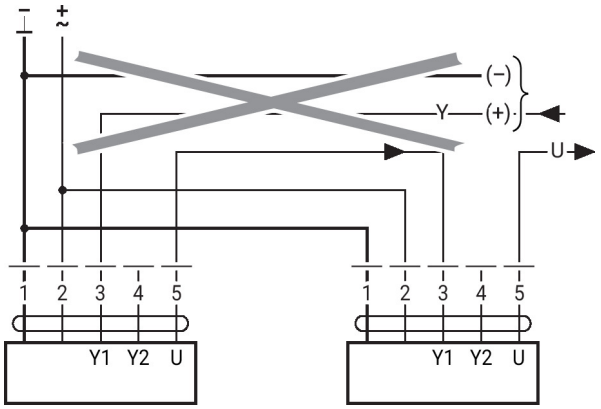

Control with 4...20 mA via external resistor

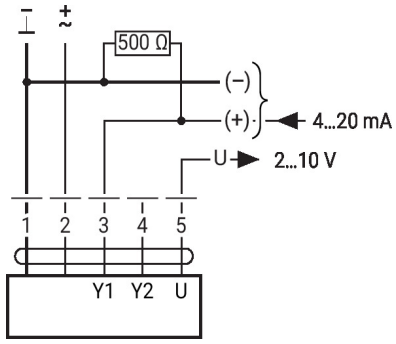

Functional check

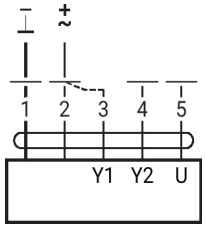

Procedure

1. Apply 24 V to connection 1 and 2
2. Disconnect connection 3:
- with upwards direction of motion: closing point at top
- with downwards direction of motion: closing point at bottom
3. Short circuit connections 2 and 3:
- Actuator runs in the opposite direction

Functions with specific parameters (configuration necessary)

Override control and limiting with AC 24 V with relay contacts

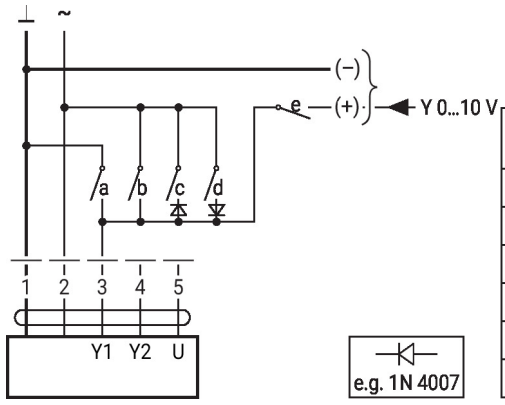

1	2	a	b	c	d	e	
							Close[1)]
							MIN
							ZS
							MAX
							Open
							Y

Control on/off

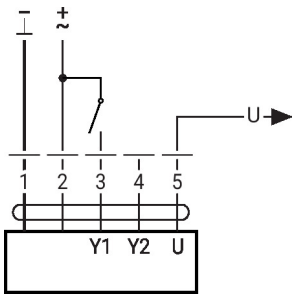

Further electrical installations

Functions with specific parameters (configuration necessary)

Control floating point

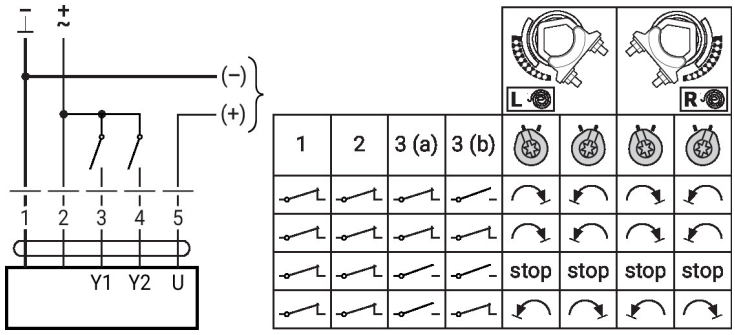

Override control and limiting with AC 24 V with rotary switch

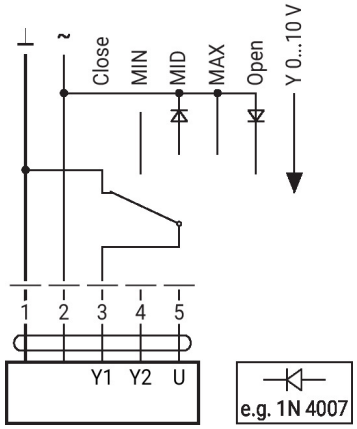

Caution:
The "Close" function is only guaranteed if the start point of the operating range is defined as min. 0.5 V.

Dimensions

PC

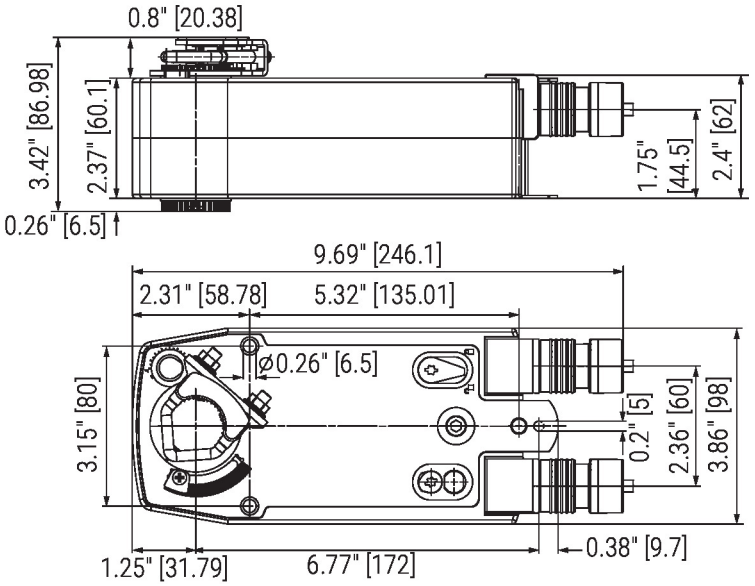

Further documentation

• Quick Guide – Belimo Assistant 2