Technical data sheet NFX24-SR-S

Customizable Fail-Safe modulating actuator for controlling dampers in typical commercial HVAC applications.

- **Torque motor 90 in-lb [10 Nm]**
- **Nominal voltage AC/DC 24 V**
- **Control Modulating**
- **Position feedback 2...10 V**
- **2x SPDT**



Picture may differ from product

5-year warranty

Technical data

Electrical data	Nominal voltage	AC/DC 24 V
	Nominal voltage frequency	50/60 Hz
	Nominal voltage range	AC 19.2...28.8 V / DC 21.6...28.8 V
	Power consumption in operation	3.5 W
	Power consumption in rest position	2.5 W
	Transformer sizing	6 VA
	Auxiliary switch	2x SPDT, 1 mA...3 A (0.5 A inductive), DC 5 V...AC 250 V, 1x 10% / 1x 11...90%
	Switching capacity auxiliary switch	1 mA...3 A (0.5 A inductive), DC 5 V...AC 250 V
	Electrical Connection	(2) 18 AWG appliance cables, 1 m, 3 m or 5 m, with or without 1/2" NPT conduit connectors
	Overload Protection	electronic throughout 0...95° rotation
	Electrical Protection	actuators are double insulated
Functional data	Torque motor	90 in-lb [10 Nm]
	Operating range Y	2...10 V
	Operating range Y note	4...20 mA w/ ZG-R01 (500 Ω, 1/4 W resistor)
	Input impedance	100 kΩ for 2...10 V (0.1 mA), 500 Ω for 4...20 mA
	Position feedback U	2...10 V
	Position feedback U note	Max. 0.5 mA
	Direction of motion motor	selectable with switch 0/1
	Direction of motion fail-safe	reversible with cw/ccw mounting
	Manual override	5 mm hex crank (3/16" Allen), supplied
	Angle of rotation	95°
	Angle of rotation note	adjustable with mechanical end stop, 35...95°
	Running Time (Motor)	95 s / 90°
	Running time fail-safe	<20 s @ -20...50°C, <60 s @ -30°C
	Sound power level, motor	40 dB(A)
	Sound power level, fail-safe	62 dB(A)
	Position indication	Mechanical
Safety data	Power source UL	Class 2 Supply
	Degree of protection NEMA/UL	NEMA 2
	Housing	UL Enclosure Type 2
	Agency Listing	cULus acc. to UL60730-1A/-2-14, CAN/CSA E60730-1:02 CE acc. to 2014/30/EU and 2014/35/EU

Technical data

Safety data	Quality Standard	ISO 9001
	UL 2043 Compliant	Suitable for use in air plenums per Section 300.22(C) of the NEC and Section 602 of the IMC
	Ambient humidity	Max. 95% RH, non-condensing
	Ambient temperature	-22...122°F [-30...50°C]
	Storage temperature	-40...176°F [-40...80°C]
	Servicing	maintenance-free
Weight	Weight	4.8 lb [2.2 kg]
Materials	Housing material	UL94-5VA

Footnotes †Rated Impulse Voltage 800V, Type of Action 1.AA.B, Control Pollution Degree 3.

Product features

Application

For fail-safe, modulating control of dampers in HVAC systems. Actuator sizing should be done in accordance with the damper manufacturer's specifications. The actuator is mounted directly to a damper shaft up to 1.05" in diameter by means of its universal clamp. A crank arm and several mounting brackets are available for applications where the actuator cannot be direct coupled to the damper shaft. The actuator operates in response to a 2 to 10 VDC or, with the addition of a 500Ω resistor, a 4 to 20 mA control input from an electronic controller or positioner. A 2 to 10 VDC feedback signal is provided for position indication. Not to be used for a master-slave application.

Operation

The NF..24-SR-S series actuators provide true spring return operation for reliable fail-safe application and positive close off on air tight dampers. The spring return system provides constant torque to the damper with, and without, power applied to the actuator. The NF..24-SR-S series provides 95° of rotation and is provided with a graduated position indicator showing 0° to 95°. The NF..24-SR-S uses a brushless DC motor which is controlled by an Application Specific Integrated Circuit (ASIC) and a microprocessor. The microprocessor provides the intelligence to the ASIC to provide a constant rotation rate and to know the actuator's exact fail-safe position. The ASIC monitors and controls the brushless DC motor's rotation and provides a digital rotation sensing function to prevent damage to the actuator in a stall condition. The actuator may be stalled anywhere in its normal rotation without the need of mechanical end switches. The NF..24-SR-S versions are provided with two built-in auxiliary switches. These SPDT switches provide safety interfacing or signaling, for example, for fan start-up. The switching function at the fail-safe position is fixed at 10°, the other switch function is adjustable between 10° to 90°. The NF..24-SR-S actuator is shipped at 5° (5° from full fail-safe) to provide automatic compression against damper gaskets for tight shut-off.

Typical specification

Spring return control damper actuators shall be direct coupled type which require no crank arm and linkage and be capable of direct mounting to a jackshaft up to a 1.05" diameter. The actuator must provide modulating damper control in response to a 2 to 10 VDC or, with the addition of a 500Ω resistor, a 4 to 20 mA control input from an electronic controller or positioner. The actuators must be designed so that they may be used for either clockwise or counter clockwise fail-safe operation. Actuators shall use a brushless DC motor controlled by a microprocessor and be protected from overload at all angles of rotation. Run time shall be constant, and independent of torque. A 2 to 10 VDC feedback signal shall be provided for position feedback. Actuators with auxiliary switches must be constructed to meet the requirements for Double Insulation so an electrical ground is not required to meet agency listings. Actuators shall be cULus listed and have a 5 year warranty, and be manufactured under ISO 9001 International Quality Control Standards. Actuators shall be as manufactured by Belimo.

Accessories

Electrical accessories	Description	Type
	Auxiliary switch, mercury-free	IRM-100 P475

Accessories

	Description	Type
	Auxiliary switch, mercury-free	P475-1
	Signal simulator, Power supply AC 120 V	PS-100
	Convert Pulse Width Modulated Signal to a 2...10 V Signal for Belimo Proportional Actuators	PTA-250
	Positioner for wall mounting	SGA24
	Positioner for front-panel mounting	SGF24
	Cable conduit connector 1/2"	TF-CC US
	Resistor, 500 Ω, 1/4" wire resistor with 6" pigtail wires	ZG-R01
	Resistor kit, 50% voltage divider	ZG-R02
	Transformer, AC 120 V to AC 24 V, 40 VA	ZG-X40
Mechanical accessories	**Description**	**Type**
	Anti-rotation bracket, for AF / NF	AF-P
	Shaft extension 240 mm ø20 mm for damper shaft ø8...22.7 mm	AV8-25
	End stop indicator	IND-AFB
	Shaft clamp reversible, for central mounting, for damper shafts ø12.7 / 19.0 / 25.4 mm	K7-2
	Ball joint suitable for damper crank arm KH8 / KH10	KG10A
	Ball joint suitable for damper crank arm KH8	KG8
	Damper crank arm Slot width 8.2 mm, clamping range ø14...25 mm	KH10
	Damper crank arm Slot width 8.2 mm, for ø1.05"	KH12
	Damper crank arm Slot width 8.2 mm, clamping range ø10...18 mm	KH8
	Actuator arm, for 3/4" shafts, clamping range ø10...22 mm, Slot width 8.2 mm	KH-AFB
	Push rod for KG10A ball joint L 36", 3/8" diameter	SH10
		SH8
	Wrench 0.32 in and 0.39 in [8 mm and 10 mm]	TOOL-06
	Baseplate extension	Z-AF
	Mounting bracket for AF..	ZG-100
	Mounting bracket for AF / NF	ZG-101
	Mounting bracket	ZG-109
	Linkage kit	ZG-110
	Mounting bracket for AF / NF	ZG-118
		ZG-120
	Mounting kit for linkage operation for flat and side installation	ZG-AFB
	Mounting kit for foot mount installation	ZG-AFB118
		ZG-DC1
		ZG-DC2
		ZG-JSA-1
		ZG-JSA-2
		ZG-JSA-3
	Weather shield 13x8x6" [330x203x152 mm] (LxWxH)	ZS-100
	Baseplate, for ZS-100	ZS-101
	Weather shield 406x213x102 mm [16x8-3/8x4"] (LxWxH)	ZS-150
	Explosion proof housing 16x10x6.435" [406x254x164 mm] (LxWxH), UL and CSA, Class I, Zone 1&2, Groups B, C, D, (NEMA 7), Class III, Hazardous (classified) Locations	ZS-260
	Weather shield 17-1/4x8-3/4x5-1/2" [438x222x140 mm] (LxWxH), NEMA 4X, with mounting brackets	ZS-300
	Weather shield 17-1/4x8-3/4x5-1/2" [438x222x140 mm] (LxWxH), NEMA 4X, with mounting brackets	ZS-300-5
	Shaft extension 1/2"	ZS-300-C1
	Shaft extension 3/4"	ZS-300-C2
	Shaft extension 1"	ZS-300-C3
	Baseplate extension	Z-SF
	Linkage kit	ZG-JSL
	Jackshaft RetroFIT+ Linkage with Belimo Rotary Actuators	

Electrical installation

Wire colors:
1 = black
2 = red
3 = white
5 = orange
S1 = violet
S2 = red
S3 = white
S4 = orange
S5 = pink
S6 = grey

AC/DC 24 V, modulating

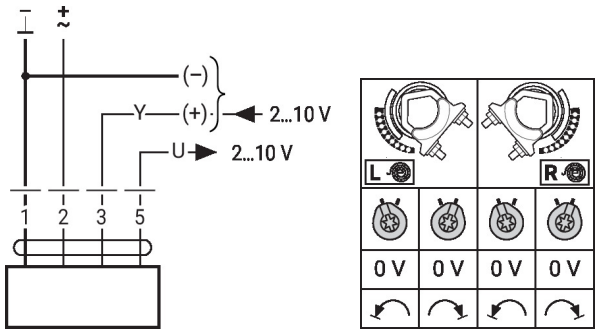

Auxiliary switch

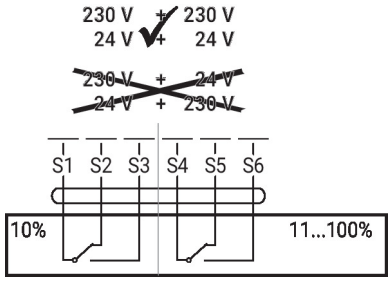

Dimensions

PC

