Technical data sheet NM24A-MOD

Communicative damper actuator for adjusting dampers in technical building installations

- **Air damper size up to approx. 2 m²**
- **Torque motor 90 in-lb [10 Nm]**
- **Nominal voltage AC/DC 24 V**
- **Control Modulating, Communicative, Hybrid**
- **Communication via BACnet MS/TP, Modbus RTU, Belimo-MP-Bus or conventional control**
- **Conversion of sensor signals**

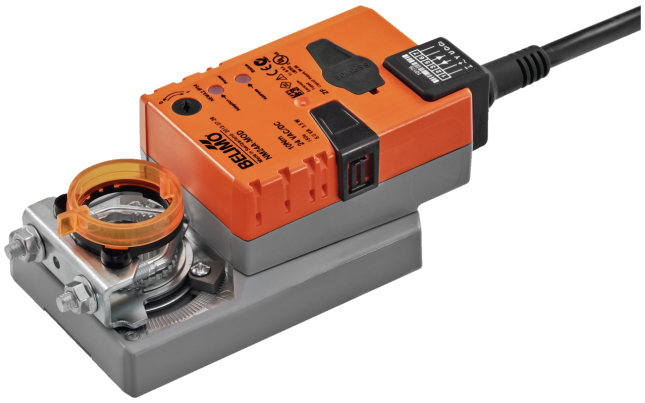

Picture may differ from product

Technical data

Electrical data	Nominal voltage	AC/DC 24 V
	Nominal voltage frequency	50/60 Hz
	Nominal voltage range	AC 19.2...28.8 V / DC 21.6...28.8 V
	Power consumption in operation	3.5 W
	Power consumption in rest position	1.4 W
	Transformer sizing	6 VA
	Connection supply/control	cable 3 ft. [1 m], 6x 0.75 mm²
Data bus communication	Communicative control	BACnet MS/TP Modbus RTU (factory setting) MP-Bus
	Number of nodes	BACnet / Modbus see interface description MP-Bus max. 8
Functional data	Torque motor	90 in-lb [10 Nm]
	Torque variable	25%, 50%, 75% reduced
	Operating range Y	2...10 V
	Operating range Y variable	0.5...10 V
	Position feedback U	2...10 V
	Position feedback U note	Max. 1 mA
	Position feedback U variable	Start point 0.5...8 V End point 2...10 V
	Position accuracy	±5%
	Direction of motion motor	selectable with switch 0/1
	Direction of motion variable	electronically reversible
	Direction of motion note	Y = 0%: At switch position 0 (ccw rotation) / 1 (cw rotation)
	Manual override	with push-button, can be locked
	Angle of rotation	Max. 95°
	Angle of rotation note	can be limited on both sides with adjustable mechanical end stops
	Running Time (Motor)	150 s / 90°
	Running time motor variable	43...173 s
	Noise level, motor	35 dB(A)
	Adaptation Setting Range	manual
	Adaptation Setting Range Variable	No action Adaptation when switched on Adaptation after pushing the manual override button
	Override control, controllable via bus communication	MAX (maximum position) = 100% MIN (minimum position) = 0% ZS (intermediate position) = 50%

Technical data

Functional data	Override control variable	MAX = (MIN + 32%)...100% MIN = 0%...(MAX – 32%) ZS = MIN...MAX
	Mechanical interface	Universal shaft clamp 8...26.7 mm
	Position indication	Mechanical, pluggable
Safety data	Protection class IEC/EN	III, Safety Extra-Low Voltage (SELV)
	Power source UL	Class 2 Supply
	Degree of protection IEC/EN	IP54
	Degree of protection NEMA/UL	NEMA 2
	Housing	UL Enclosure Type 2
	EMC	CE according to 2014/30/EU
	Certification IEC/EN	IEC/EN 60730-1 and IEC/EN 60730-2-14
	UL Approval	cULus according to UL60730-1A, UL60730-2-14 and CAN/CSA E60730-1 The UL marking on the actuator depends on the production site, the device is UL-compliant in any case
	Hygiene test	According to VDI 6022 Part 1 / SWKI VA 104-01, cleanable and disinfectable, low emission
	Type of action	Type 1
	Rated impulse voltage supply / control	0.8 kV
	Pollution degree	3
	Ambient humidity	Max. 95% RH, non-condensing
	Ambient temperature	-22...122°F [-30...50°C]
	Storage temperature	-40...176°F [-40...80°C]
	Servicing	maintenance-free
Weight	Weight	2.1 lb [0.93 kg]

Safety notes



- This device has been designed for use in stationary heating, ventilation and air-conditioning systems and must not be used outside the specified field of application, especially in aircraft or in any other airborne means of transport.
- Outdoor application: only possible in case that no (sea) water, snow, ice, insolation or aggressive gases interfere directly with the actuator and that is ensured that the ambient conditions remain at any time within the thresholds according to the data sheet.
- Only authorized specialists may carry out installation. All applicable legal or institutional installation regulations must be complied with during installation.
- The device may only be opened at the manufacturer's site. It does not contain any parts that can be replaced or repaired by the user.
- Cables must not be removed from the device.
- To calculate the torque required, the specifications supplied by the damper manufacturers concerning the cross-section and design, as well as the installation site and ventilation conditions, must be observed.
- The device contains electrical and electronic components and must not be disposed of as household refuse. All locally valid regulations and requirements must be observed.

Product features

Operating mode The actuator is fitted with an integrated interface for BACnet MS/TP, Modbus RTU and MP-Bus. It receives the digital control signal from the control system and returns the current status.

Product features

Converter for sensors
Connection option for a sensor (passive, active or with switching contact). In this way, the analog sensor signal can be easily digitized and transferred to the bus systems : BACnet, Modbus or MP-Bus.

Configurable Device
The factory settings cover the most common applications. Single parameters can be modified with the Belimo Assistant 2 or ZTH EU.

The communication parameters of the bus systems (address, baud rate etc.) are set with the ZTH EU. Pressing the "Address" button on the actuator while connecting the supply voltage resets the communication parameters to the factory setting.

Quick addressing: The BACnet and Modbus address can alternatively be set using the buttons on the actuator and selecting 1...16. The selected value is added to the "basic address" parameter and results in the absolute BACnet and Modbus address.

Combination analogue - communicative (hybrid mode)
With conventional control by means of an analogue control signal, BACnet or Modbus can be used for the communicative position feedback

Simple direct mounting
Simple direct mounting on the damper shaft with a universal shaft clamp, supplied with an anti-rotation mechanism to prevent the actuator from rotating.

Manual override
Manual override with push-button possible (the gear train is disengaged for as long as the button is pressed or remains locked).

Adjustable angle of rotation
Adjustable angle of rotation with mechanical end stops.

High functional reliability
The actuator is overload protected, requires no limit switches and automatically stops when the end stop is reached.

Home position
The first time the supply voltage is switched on, i.e. at the time of commissioning, the actuator carries out a synchronization. The synchronization is in the home position (0%).

The actuator then moves into the position defined by the control signal.

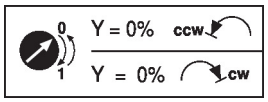

Adaptation and synchronization
An adaptation can be triggered manually by pressing the "Adaptation" button or with the Belimo Assistant 2. Both mechanical end stops are detected during the adaptation (entire setting range).

Automatic synchronisation after pressing the manual override button is configured. The synchronization is in the home position (0%).

The actuator then moves into the position defined by the control signal.

A range of settings can be made using the Belimo Assistant 2.

Accessories

Tools

Description	Type
Service tool for wired and wireless setup, on-site operation and troubleshooting.	Belimo Assistant 2
Adapter for Service-Tool ZTH	MFT-C
Connecting cable 16 ft [5 m], A: RJ11 6/4 LINK.10, B: 6-pin for connection to service socket	ZK1-GEN
Connecting cable 16 ft [5 m], A: RJ11 6/4 LINK.10, B: free wire end for connection to MP/PP terminal	ZK2-GEN
Belimo Assistant Link Bluetooth and USB to NFC and MP-Bus converter for configurable and communicative devices	LINK.10

Electrical accessories

Description	Type
Auxiliary switch 1x SPDT add-on	S1A
Auxiliary switch 2x SPDT add-on	S2A
Feedback potentiometer 140 Ω add-on	P140A
Feedback potentiometer 1 kΩ add-on	P1000A
Feedback potentiometer 10 kΩ add-on	P10000A

Accessories

Mechanical accessories	Description	Type
	Actuator arm for standard shaft clamp (one-sided)	AH-25
	Shaft extension 240 mm ø20 mm for damper shaft ø8...22.7 mm	AV8-25
	Ball joint suitable for damper crank arm KH8	KG8
	Ball joint suitable for damper crank arm KH8 / KH10	KG10A
	Damper crank arm Slot width 8.2 mm, clamping range ø10...18 mm	KH8
	Shaft clamp one-sided, clamping range ø8...26 mm with insert, Multipack 20 pcs.	K-ENMA
	Shaft clamp one-sided, clamping range ø8...26 mm, Multipack 20 pcs.	K-ENSA
	Shaft clamp reversible, clamping range ø8...20 mm	K-NA
	Form fit insert 8x8 mm, Multipack 20 pcs.	ZF8-NMA
	Form fit insert 10x10 mm, Multipack 20 pcs.	ZF10-NSA
	Form fit insert 12x12 mm, Multipack 20 pcs.	ZF12-NSA
	Form fit insert 15x15 mm, Multipack 20 pcs.	ZF15-NSA
	Form fit insert 16x16 mm, Multipack 20 pcs.	ZF16-NSA
	Mounting kit for linkage operation for flat installation	ZG-NMA
	Anti-rotation mechanism 180 mm, Multipack 20 pcs.	Z-ARS180
	Baseplate extension for NMB(X) to NM..	Z-NMA
	Position indicator, Multipack 20 pcs.	Z-PI

Electrical installation

Supply from isolating transformer.

The wiring of the line for BACnet MS/TP / Modbus RTU is to be carried out in accordance with applicable RS485 regulations.

Modbus / BACnet: Supply and communication are not a galvanic dry contact. COM and the ground of the devices must be connected.

Wire colors:
1 = black
2 = red
3 = white
5 = orange
6 = pink
7 = grey

Functions:
C1 = D- (wire 6)
C2 = D+ (wire 7)

BACnet MS/TP / Modbus RTU

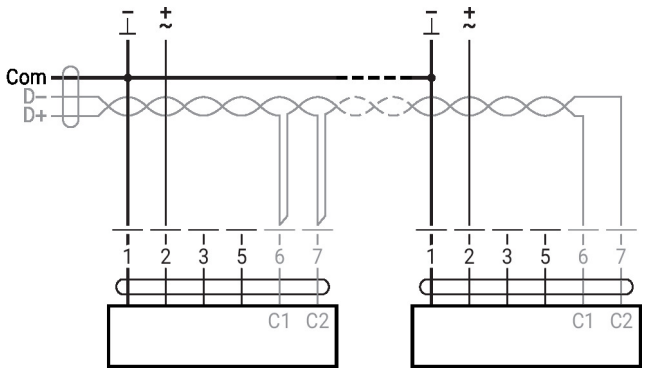

Further electrical installations

Functions with basic values (conventional mode)

MP-Bus Network topology

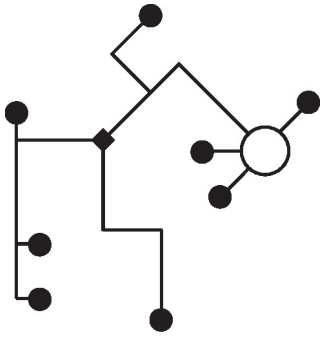

There are no restrictions for the network topology (star, ring, tree or mixed forms are permitted).
Supply and communication in one and the same 3-wire cable
• no shielding or twisting necessary
• no terminating resistors required

MP-Bus

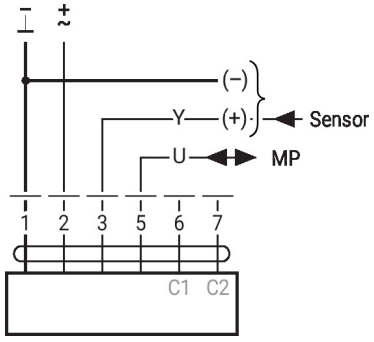

Functions with specific parameters (configuration necessary)

Modbus RTU / BACnet MS/TP with analog setpoint (hybrid operation)

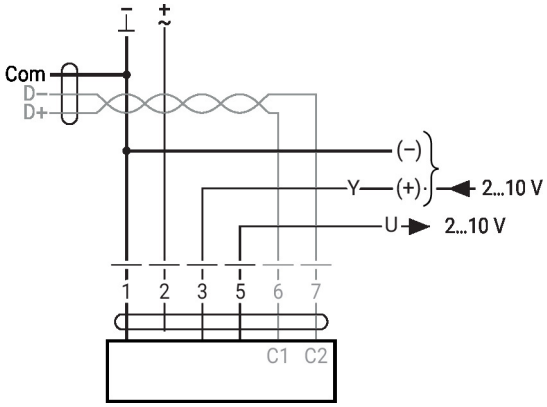

Sensor Connection

Connection with active sensor, e.g. 0...10 V @ 0...50°C

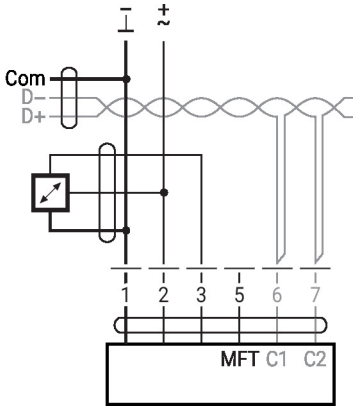

Possible input voltage range:
0...10 V
Resolution 30 mV

Further electrical installations

Sensor Connection

Connection with switching contact, e.g., differential pressure switch

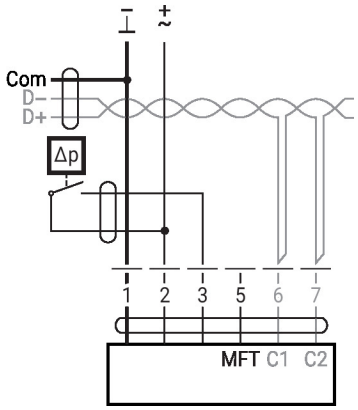

Switching contact requirements:
The switching contact must be able to switch a current of 16 mA at 24 V accurately.
Start point of the operating range must be configured on the MOD actuator as ≥0.5 V.

Connection with passive sensor, e.g. Pt1000, Ni1000, NTC

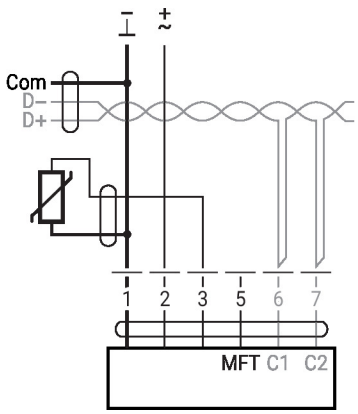

Ni1000	−28...+98°C	850...1600 Ω [2]
PT1000	−35...+155°C	850...1600 Ω [2]
NTC	−10...+160°C [1]	200 Ω...60 kΩ [2]

1) depending on type
2) Resolution 1 Ohm
Compensation of the measured value is recommended

Operating controls and indicators

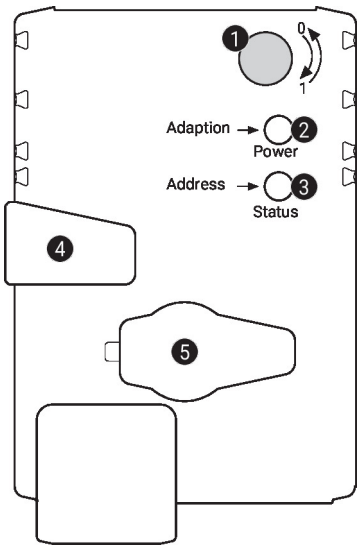

1 Direction-of-rotation switch

Switch over:	Direction of rotation changes

2 Push-button and LED display green

Off:	No power supply or malfunction
On:	In operation
Flashing:	In address mode: Pulses according to set address (1...16) When starting: Reset to factory setting (Communication)
Press button:	In standard mode: Triggers angle-of-rotation adaptation In address mode: Confirmation of set address (1...16)

3 Push-button and LED display yellow

Off:	Standard mode
On:	Adaptation or synchronisation process active or actuator in address mode (LED display green flashing)
Flickering:	BACnet / Modbus communication active
Press button:	In operation (>3 s): Switch address mode on and off In address mode: Address setting by pressing several times When starting (>5 s): Reset to factory setting (Communication)

4 Manual override button

Press button:	Gear train disengages, motor stops, manual override possible
Release button:	Gear train engages, synchronisation starts, followed by standard mode

5 Service plug

For connecting configuration and service tools

Check power supply connection

2 Off and 3 On	Possible wiring error in power supply

Service

Using Belimo Assistant 2, device parameters can be modified. Belimo Assistant 2 can operate on a smartphone, tablet, or PC. The available connection options vary depending on the hardware on which Belimo Assistant 2 is installed.

For more information about Belimo Assistant 2, refer to the Quick Guide – Belimo Assistant 2.

Wired connection

Alternatively, the Belimo devices can be accessed by connecting Belimo Assistant Link to the USB port on a PC or laptop and to the MP-Bus wire on the device.

Belimo Assistant 2 acts as MP client. Therefore, no other MP client shall be connected to the device.

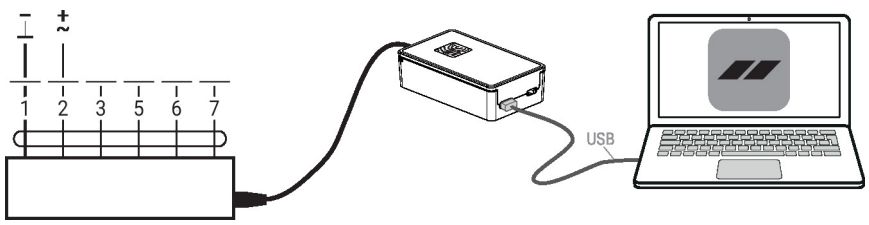

Service

Quick addressing

1. Press the "Address" button until the green "Power" LED is no longer illuminated. The green "Power" LED flashes in accordance with the previously set address.

2. Set the address by pressing the "Address" button the corresponding number of times (1...16).

3. The green LED flashes in accordance with the address that has been entered (1...16). If the address is not correct, it can be reset in accordance with step 2.

4. Confirm the address setting by pressing the green "Adaptation" button.

If the address is not confirmed within 60 seconds, the address procedure will be ended. Any address change that has already been started will be discarded.

The resulting BACnet MS/TP and Modbus RTU address is made up of the set basic address plus the short address (e.g. 100+7=107).

Dimensions

Stem length

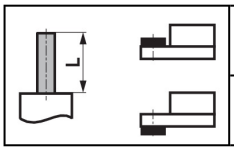	Min. 40
	Min. 0.75" [20 mm]

Clamping range

	8...26.7	≥8	≤26.7
*	8...20	≥8	≤20

*Option: Shaft clamp mounted below (accessories K-NA needed)

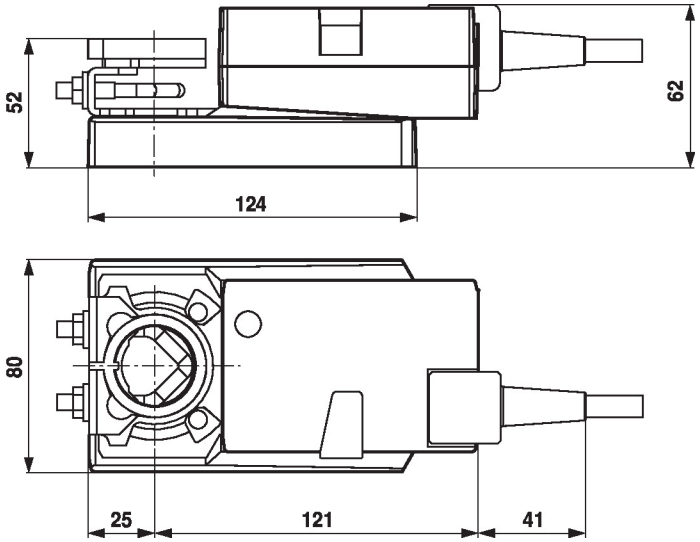

Further documentation

- Tool connections
- BACnet Interface description
- Modbus Interface description
- Overview MP Cooperation Partners
- MP Glossary
- Introduction to MP-Bus Technology
- Quick Guide – Belimo Assistant 2

Application notes

- For digital control of actuators in VAV applications patent EP 3163399 must be considered.