Technical data sheet B210

2-way, Characterized Control Valve, Stainless Steel Ball and Stem



Picture may differ from product

5-year warranty

Type overview

Type	DN
B210	1/2" [15]

Technical data

Functional data	Valve size [mm]	0.5" [15]
	Fluid	chilled or hot water, up to 60% glycol
	Fluid Temp Range (water)	0...250°F [-18...120°C]
	Body Pressure Rating	600 psi
	Close-off pressure Δps	200 psi
	Flow characteristic	equal percentage
	Leakage rate	0% for A–AB
	Pipe connection	Internal thread NPT (female)
	Servicing	maintenance-free
	Flow Pattern	2-way
	Controllable flow range	75°
	Cv	1.2
Materials	Valve body	Nickel-plated brass body
	Stem	stainless steel
	Stem seal	EPDM (lubricated)
	Seat	PTFE
	Characterized disc	TEFZEL®
	O-ring	EPDM (lubricated)
	Ball	stainless steel
Suitable actuators	Non Fail-Safe	TR LRB(X) LRQB(X) NRB(X) N4
	Spring	TFRB(X) LF

Safety notes

- WARNING: This product can expose you to lead which is known to the State of California to cause cancer and reproductive harm. For more information go to www.p65warnings.ca.gov

Product features

Application

This valve is typically used in air handling units on heating or cooling coils, and fan coil unit heating or cooling coils. Some other common applications include Unit Ventilators, VAV box re-heat coils and bypass loops. This valve is suitable for use in a hydronic system with variable flow.

Flow/Mounting details

Two-way valves should be installed with the disc upstream.

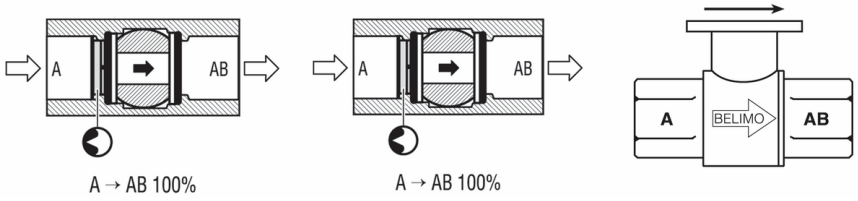

Dimensions

Type	DN	Weight
B210	1/2" [15]	0.50 lb [0.23 kg]

LRB, LRX

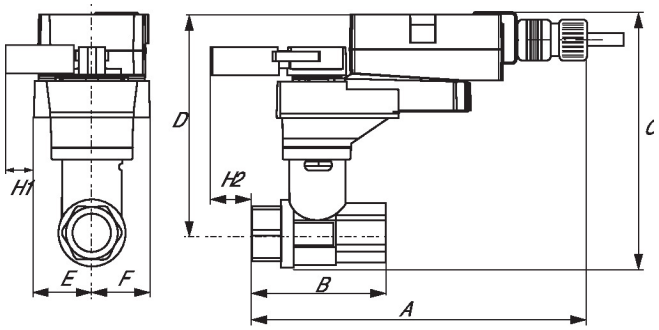

A	B	C	D	E	F	H1	H2
9.4" [239]	2.4" [60]	5.2" [132]	4.6" [117]	1.3" [33]	1.3" [33]	1.2" [30]	1.1" [28]

TR

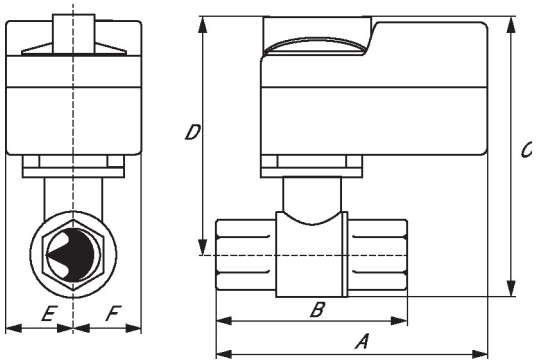

A	B	C	D	E	F
3.7" [95]	2.4" [60]	4.8" [122]	4.2" [107]	1.3" [33]	1.3" [33]

TFRB, TFRX

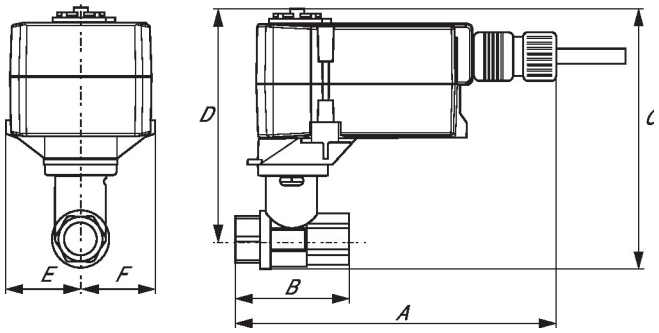

A	B	C	D	E	F
6.6" [167]	2.4" [60]	4.9" [124]	4.3" [110]	1.5" [39]	1.5" [39]

Dimensions

LF

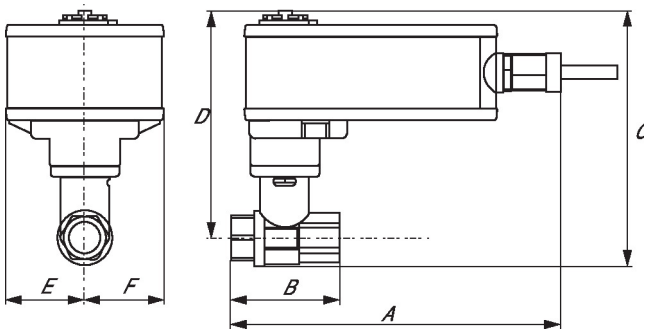

A	B	C	D	E	F
7.91" [200]	2.4" [60]	5.7" [146]	5.1" [129]	1.8" [46]	1.8" [46]

ARB N4, ARX N4, NRB N4, NRX N4

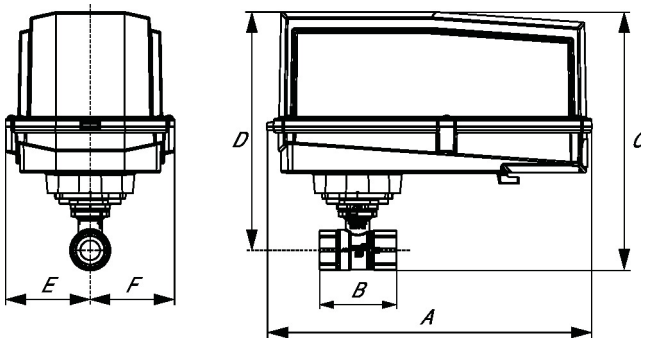

A	B	C	D	E	F
11.4" [289]	2.4" [60]	7.7" [196]	7.0" [179]	3.1" [80]	3.1" [80]

On/Off, Floating point, Non fail-safe, 24 V



Picture may differ from product

5-year warranty

Technical data

Electrical data	Nominal voltage	AC 24 V
	Nominal voltage frequency	50/60 Hz
	Nominal voltage range	AC 19.2...28.8 V
	Power consumption in operation	1 W
	Transformer sizing	1 VA
	Electrical Connection	Screw terminal (for 26...14 AWG wire)
	Overload Protection	electronic throughout full rotation
Functional data	Manual override	push down handle
	Angle of rotation	90°
	Running Time (Motor)	90 s / 90°
	Sound power level, motor	35 dB(A)
	Position indication	integrated into handle
Safety data	Power source UL	Class 2 Supply
	Degree of protection IEC/EN	IP40
	Degree of protection NEMA/UL	NEMA 1
	Housing	UL Enclosure Type 1
	Agency Listing	cULus acc. to UL60730-1A/-2-14, CAN/CSA E60730-1:02 CE acc. to 2014/30/EU and 2014/35/EU
	Quality Standard	ISO 9001
	UL 2043 Compliant	Suitable for use in air plenums per Section 300.22(C) of the NEC and Section 602 of the IMC
	Ambient humidity	Max. 95% RH, non-condensing
	Ambient temperature	-22...122°F [-30...50°C]
	Storage temperature	-40...176°F [-40...80°C]
	Servicing	maintenance-free
Weight	Weight	0.85 lb [0.39 kg]

Electrical installation

Wire colors:
1 = black
2 = red
3 = white

AC/DC 24 V, on/off

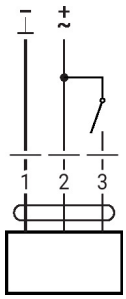

AC/DC 24 V, 3-point

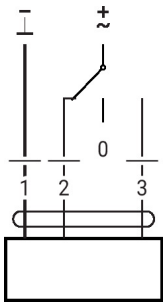

1	2	3	
			A - AB = 0%
			A - AB = 100%
			stop
			A - AB = 100%