Technical data sheet B212

2-way, Characterized Control Valve, Stainless Steel Ball and Stem



Picture may differ from product

5-year warranty

Type overview

Type	DN
B212	1/2" [15]

Technical data

Functional data	Valve size [mm]	0.5" [15]
	Fluid	chilled or hot water, up to 60% glycol
	Fluid Temp Range (water)	0...250°F [-18...120°C]
	Body Pressure Rating	600 psi
	Close-off pressure Δps	200 psi
	Flow characteristic	equal percentage
	Leakage rate	0% for A–AB
	Pipe connection	Internal thread NPT (female)
	Servicing	maintenance-free
	Flow Pattern	2-way
	Controllable flow range	75°
	Cv	3
Materials	Valve body	Nickel-plated brass body
	Stem	stainless steel
	Stem seal	EPDM (lubricated)
	Seat	PTFE
	Characterized disc	TEFZEL®
	O-ring	EPDM (lubricated)
	Ball	stainless steel
Suitable actuators	Non Fail-Safe	TR LRB(X) LRQB(X) NRB(X) N4
	Spring	TFRB(X) LF

Safety notes

- WARNING: This product can expose you to lead which is known to the State of California to cause cancer and reproductive harm. For more information go to www.p65warnings.ca.gov

Product features

Application

This valve is typically used in air handling units on heating or cooling coils, and fan coil unit heating or cooling coils. Some other common applications include Unit Ventilators, VAV box re-heat coils and bypass loops. This valve is suitable for use in a hydronic system with variable flow.

Flow/Mounting details

Two-way valves should be installed with the disc upstream.

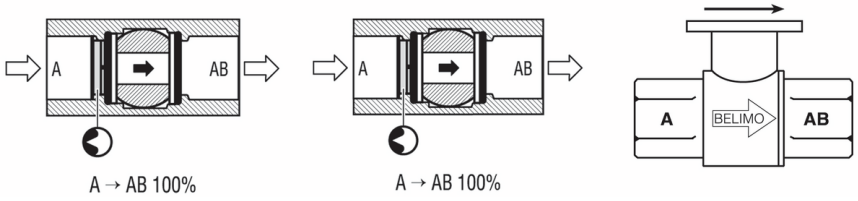

Dimensions

Type	DN	Weight
B212	1/2" [15]	0.65 lb [0.30 kg]

LRB, LRX

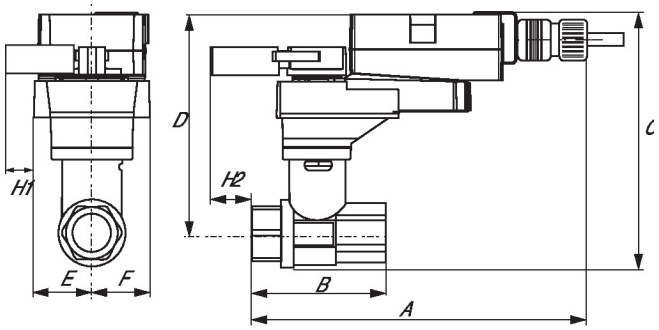

A	B	C	D	E	F	H1	H2
9.4" [239]	2.4" [60]	5.6" [141]	5.0" [127]	1.3" [33]	1.3" [33]	1.2" [30]	1.1" [28]

TR

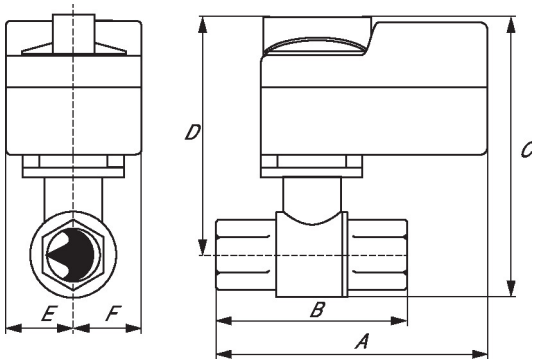

A	B	C	D	E	F
3.7" [95]	2.4" [60]	5.2" [132]	4.6" [117]	1.3" [33]	1.3" [33]

TFRB, TFRX

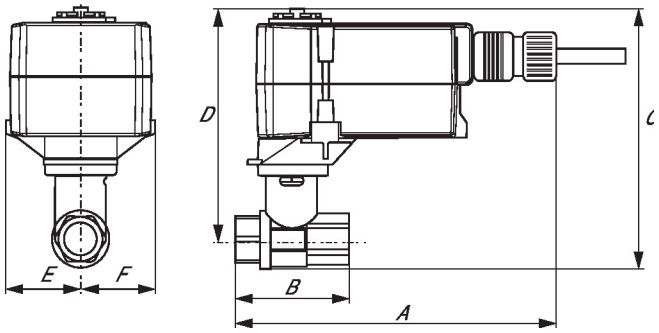

A	B	C	D	E	F
6.6" [167]	2.4" [60]	5.5" [139]	4.7" [120]	1.5" [39]	1.5" [39]

Dimensions

LF

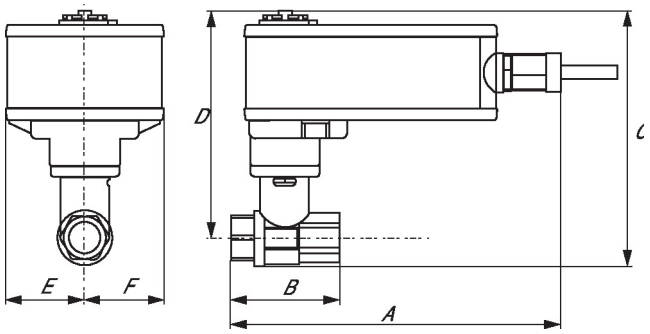

A	B	C	D	E	F
7.91" [200]	2.4" [60]	6.1" [154]	5.5" [140]	1.8" [46]	1.8" [46]

ARB N4, ARX N4, NRB N4, NRX N4

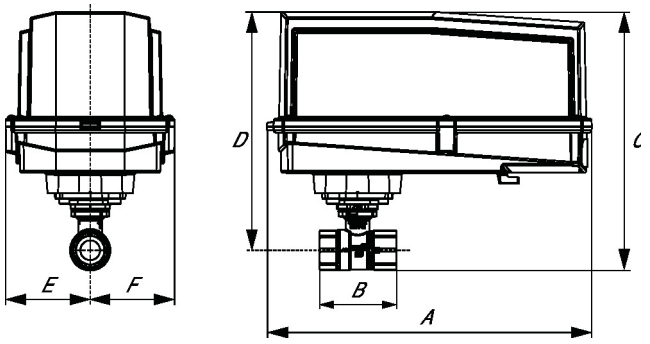

A	B	C	D	E	F
11.4" [289]	2.4" [60]	7.7" [196]	7.0" [179]	3.1" [80]	3.1" [80]

BELIMO

Technical data sheet LRB24-3-S

On/Off, Floating point, Non fail-safe, 24 V



Picture may differ from product

5-year warranty

Technical data

Electrical data	Nominal voltage	AC/DC 24 V
	Nominal voltage frequency	50/60 Hz
	Nominal voltage range	AC 19.2...28.8 V / DC 21.6...28.8 V
	Power consumption in operation	1.5 W
	Power consumption in rest position	0.2 W
	Transformer sizing	2.5 VA
	Auxiliary switch	1x SPDT, 3 A resistive (0.5 A inductive) @ AC 250 V, adjustable 0...100%
	Switching capacity auxiliary switch	3 A resistive (0.5 A inductive) @ AC 250 V
	Electrical Connection	18 AWG plenum cable, 1 m, with 1/2" NPT conduit connector
	Overload Protection	electronic thoughout 0...90° rotation
	Electrical Protection	actuators are double insulated
Functional data	Direction of motion motor	selectable with switch 0/1
	Manual override	external push button
	Angle of rotation	90°
	Angle of rotation note	adjustable with mechanical stop
	Running Time (Motor)	90 s / 90°
	Sound power level, motor	35 dB(A)
	Position indication	Mechanical, pluggable
Safety data	Power source UL	Class 2 Supply
	Degree of protection NEMA/UL	NEMA 2
	Housing	UL Enclosure Type 2
	Agency Listing	cULus acc. to UL60730-1A/-2-14, CAN/CSA E60730-1:02 CE acc. to 2014/30/EU and 2014/35/EU
	Quality Standard	ISO 9001
	UL 2043 Compliant	Suitable for use in air plenums per Section 300.22(C) of the NEC and Section 602 of the IMC
	Ambient humidity	Max. 95% RH, non-condensing
	Ambient temperature	-22...122°F [-30...50°C]
	Storage temperature	-40...176°F [-40...80°C]
	Servicing	maintenance-free
Weight	Weight	1.3 lb [0.60 kg]

Technical data

Materials	Housing material	Galvanized steel and plastic housing

Footnotes †Rated Impulse Voltage 800V, Type action 1, Control Pollution Degree 3.

Accessories

Electrical accessories

Description	Type
Auxiliary switch 1x SPDT add-on	S1A
Auxiliary switch 2x SPDT add-on	S2A
Feedback potentiometer 140 Ω add-on, grey	P140A GR
Feedback potentiometer 1 kΩ add-on, grey	P1000A GR
Feedback potentiometer 10 kΩ add-on, grey	P10000A GR
Feedback potentiometer 2.8 kΩ add-on, grey	P2800A GR
Feedback potentiometer 500 Ω add-on, grey	P500A GR
Feedback potentiometer 5 kΩ add-on, grey	P5000A GR

Electrical installation

Wire colors:
1 = black
2 = red
3 = white
S1 = violet
S2 = red
S3 = white

AC/DC 24 V, on/off

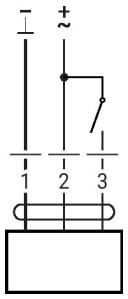

AC/DC 24 V, 3-point

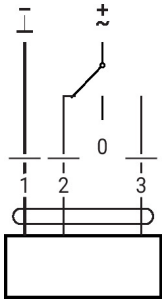

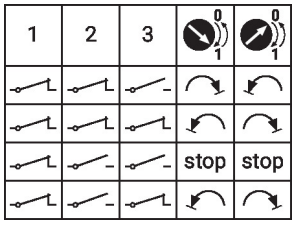

Auxiliary switch

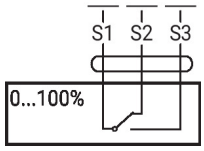

Auxiliary Switches

