BELIMO

# Technical data sheet B214

2-way, Characterized Control Valve, Stainless Steel Ball and Stem



Picture may differ from product

5-year warranty

## Type overview

| Type | DN |
|---|---|
| B214 | 1/2" [15] |

## Technical data

| | | |
|---|---|---|
| **Functional data** | Valve size [mm] | 0.5" [15] |
| | Fluid | chilled or hot water, up to 60% glycol |
| | Fluid Temp Range (water) | 0...250°F [-18...120°C] |
| | Body Pressure Rating | 600 psi |
| | Close-off pressure Δps | 200 psi |
| | Flow characteristic | equal percentage |
| | Leakage rate | 0% for A–AB |
| | Pipe connection | Internal thread<br>NPT (female) |
| | Servicing | maintenance-free |
| | Flow Pattern | 2-way |
| | Controllable flow range | 75° |
| | Cv | 7.4 |
| **Materials** | Valve body | Nickel-plated brass body |
| | Stem | stainless steel |
| | Stem seal | EPDM (lubricated) |
| | Seat | PTFE |
| | Characterized disc | TEFZEL® |
| | O-ring | EPDM (lubricated) |
| | Ball | stainless steel |
| **Suitable actuators** | Non Fail-Safe | TR<br>LRB(X)<br>LRQB(X)<br>NRB(X) N4 |
| | Spring | TFRB(X)<br>LF |

## Safety notes

- WARNING: This product can expose you to lead which is known to the State of California to cause cancer and reproductive harm. For more information go to www.p65warnings.ca.gov

## Product features

**Application**

This valve is typically used in air handling units on heating or cooling coils, and fan coil unit heating or cooling coils. Some other common applications include Unit Ventilators, VAV box re-heat coils and bypass loops. This valve is suitable for use in a hydronic system with variable flow.

**Flow/Mounting details**

Two-way valves should be installed with the disc upstream.

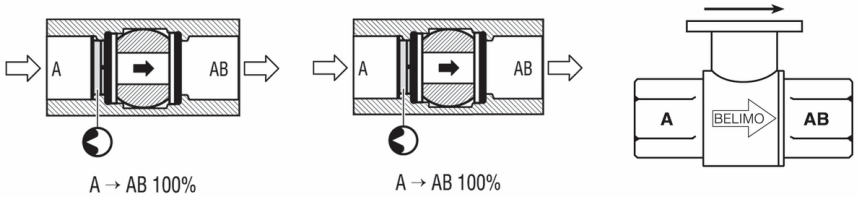


## Dimensions

| Type | DN | Weight |
|---|---|---|
| B214 | 1/2" [15] | 0.66 lb [0.30 kg] |

LRB, LRX

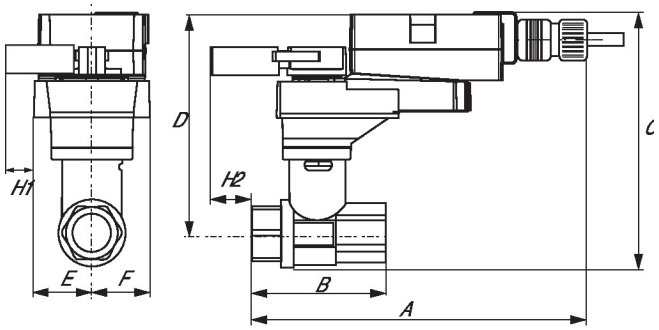


| A | B | C | D | E | F | H1 | H2 |
|---|---|---|---|---|---|---|---|
| 9.4" [239] | 2.4" [60] | 5.6" [141] | 5.0" [127] | 1.3" [33] | 1.3" [33] | 1.2" [30] | 1.1" [28] |

TR

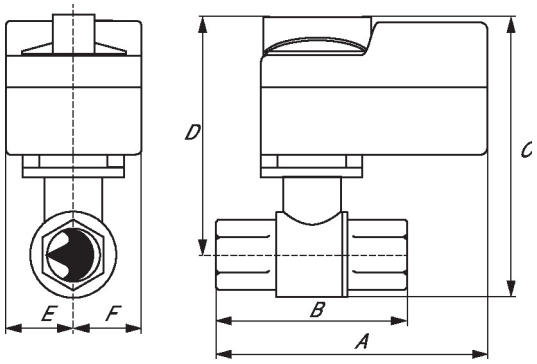


| A | B | C | D | E | F |
|---|---|---|---|---|---|
| 3.7" [95] | 2.4" [60] | 5.2" [132] | 4.6" [117] | 1.3" [33] | 1.3" [33] |

TFRB, TFRX

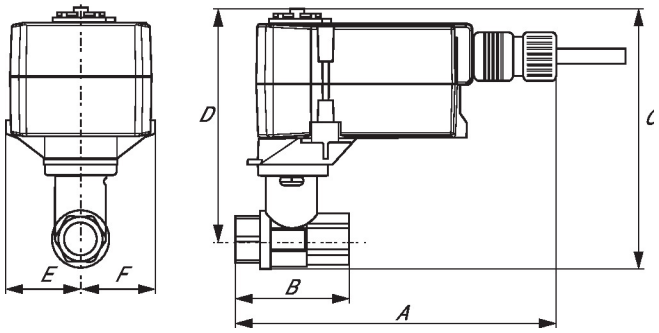


| A | B | C | D | E | F |
|---|---|---|---|---|---|
| 6.6" [167] | 2.4" [60] | 5.5" [139] | 4.7" [120] | 1.5" [39] | 1.5" [39] |

## Dimensions

LF

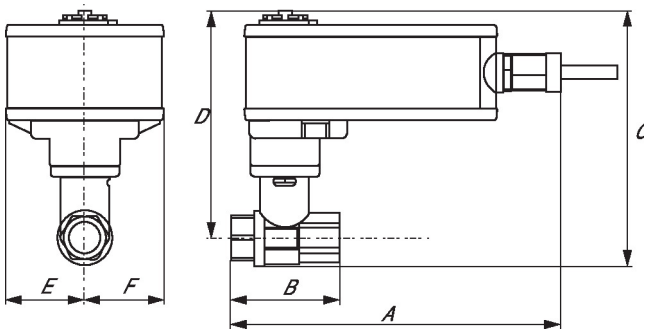


| A | B | C | D | E | F |
|---|---|---|---|---|---|
| 7.91" [200] | 2.4" [60] | 6.1" [154] | 5.5" [140] | 1.8" [46] | 1.8" [46] |

ARB N4, ARX N4, NRB N4, NRX N4

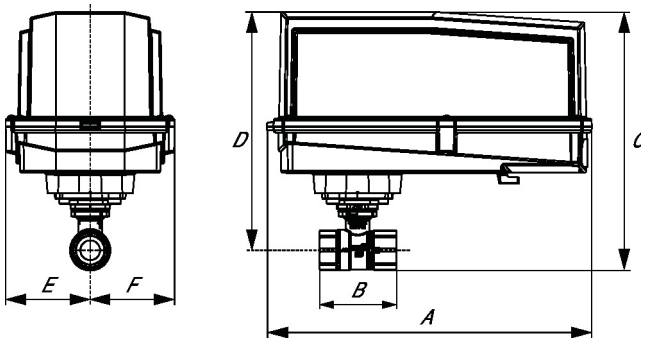


| A | B | C | D | E | F |
|---|---|---|---|---|---|
| 11.4" [289] | 2.4" [60] | 7.7" [196] | 7.0" [179] | 3.1" [80] | 3.1" [80] |