BELIMO

Technical data sheet B218

2-way, Characterized Control Valve, Stainless Steel Ball and Stem



Picture may differ from product

5-year warranty

Type overview

Type	DN
B218	3/4" [20]

Technical data

Functional data	Valve size [mm]	0.75" [20]
	Fluid	chilled or hot water, up to 60% glycol
	Fluid Temp Range (water)	0...250°F [-18...120°C]
	Body Pressure Rating	600 psi
	Close-off pressure Δps	200 psi
	Flow characteristic	equal percentage
	Leakage rate	0% for A–AB
	Pipe connection	Internal thread NPT (female)
	Servicing	maintenance-free
	Flow Pattern	2-way
	Controllable flow range	75°
	Cv	7.4
Materials	Valve body	Nickel-plated brass body
	Stem	stainless steel
	Stem seal	EPDM (lubricated)
	Seat	PTFE
	Characterized disc	TEFZEL®
	O-ring	EPDM (lubricated)
	Ball	stainless steel
Suitable actuators	Non Fail-Safe	TR LRB(X) LRQB(X) NRB(X) N4
	Spring	TFRB(X) LF

Safety notes

- WARNING: This product can expose you to lead which is known to the State of California to cause cancer and reproductive harm. For more information go to www.p65warnings.ca.gov

Product features

Application

This valve is typically used in air handling units on heating or cooling coils, and fan coil unit heating or cooling coils. Some other common applications include Unit Ventilators, VAV box re-heat coils and bypass loops. This valve is suitable for use in a hydronic system with variable flow.

Flow/Mounting details

Two-way valves should be installed with the disc upstream.

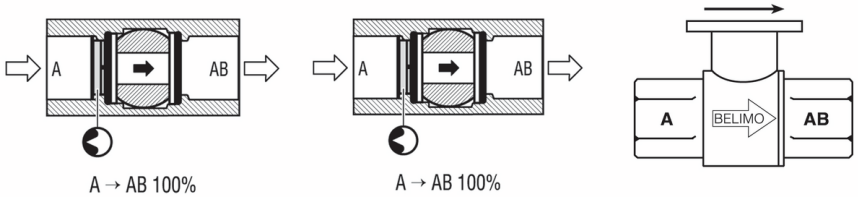

Dimensions

Type	DN	Weight
B218	3/4" [20]	0.73 lb [0.33 kg]

LRB, LRX

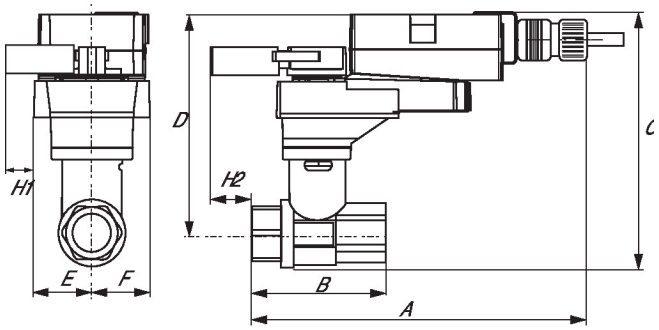

A	B	C	D	E	F	H1	H2
9.4" [239]	2.7" [69]	5.8" [147]	5.1" [129]	1.3" [33]	1.3" [33]	1.2" [30]	1" [25]

TR

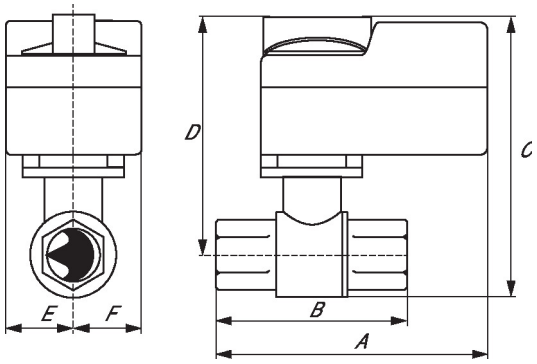

A	B	C	D	E	F
4.0" [102]	2.7" [69]	5.39" [137]	5.1" [129]	1.3" [33]	1.3" [33]

TFRB, TFRX

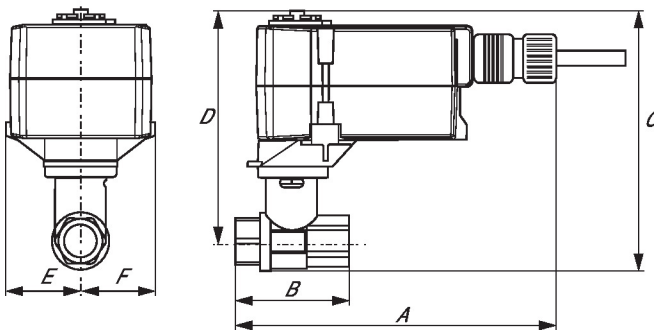

A	B	C	D	E	F
7.0" [178]	2.7" [69]	5.5" [139]	4.8" [122]	1.5" [39]	1.5" [39]

Dimensions

LF

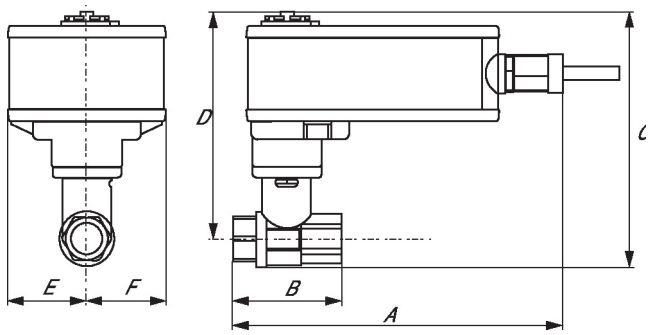

A	B	C	D	E	F
8.6" [218]	2.7" [69]	6.3" [159]	5.6" [142]	1.8" [46]	1.8" [46]

ARB N4, ARX N4, NRB N4, NRX N4

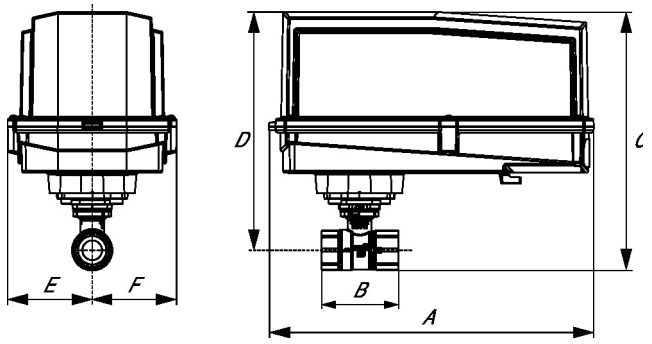

A	B	C	D	E	F
11.4" [289]	2.7" [69]	7.8" [199]	7.1" [181]	3.1" [80]	3.1" [80]

- Nominal voltage AC/DC 24 V
- Control Modulating, On/Off, Floating point, Communicative
- Position feedback 2...10 V

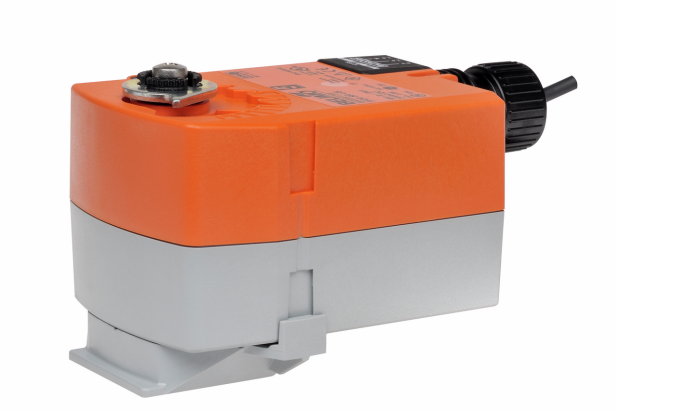

Picture may differ from product

Technical data

Electrical data	Nominal voltage	AC/DC 24 V
	Nominal voltage frequency	50/60 Hz
	Nominal voltage range	AC 19.2...28.8 V / DC 21.6...35.0 V
	Power consumption in operation	1.3 W
	Power consumption in rest position	0.6 W
	Transformer sizing	2.6 VA
	Connection supply/control	Cable 3 ft. [1 m], 4x 0.75 mm²
	Parallel operation	Yes (note the performance data)
Data bus communication	Communicative control	MP-Bus
	Number of nodes	MP-Bus max. 16
Functional data	Operating range Y	2...10 V
	Input impedance	100 kΩ
	Operating range Y variable	Start point 0.5...30 V End point 2.5...32 V
	Operating modes optional	variable (VDC, PWM, on/off, floating point)
	Position feedback U	2...10 V
	Position feedback U note	Max. 1 mA
	Position feedback U variable	Start point 0.5...8 V End point 2.5...10 V
	Position accuracy	±5%
	Direction of motion variable	electronically reversible
	Manual override	No
	Angle of rotation	Max. 95°
	Angle of rotation note	adjustable starting at 37% in 2.5% steps (with mechanical end stop)
	Running Time (Motor)	95 s /
	Running time motor variable	75...300 s
	Running time fail-safe	<25 s @ -20...50°C, <60 s @ -30°C
	Sound power level, fail-safe	36 dB(A)
	Adaptation Setting Range	with Belimo Assistant 2
Safety data	Power source UL	Class 2 Supply
	Degree of protection NEMA/UL	NEMA 2
	Housing	UL Enclosure Type 2
	Agency Listing	cULus acc. to UL60730-1A/-2-14, CAN/CSA E60730-1:02, CE acc. to 2014/30/EU
	Quality Standard	ISO 9001

Technical data

Safety data	UL 2043 Compliant	Suitable for use in air plenums per Section 300.22(C) of the NEC and Section 602 of the IMC
	Ambient humidity	Max. 95% RH, non-condensing
	Ambient temperature	-22...122°F [-30...50°C]
	Storage temperature	-40...176°F [-40...80°C]
	Servicing	maintenance-free
Weight	Weight	1.4 lb [0.62 kg]

Footnotes †Rated Impulse Voltage 800V, Type of action 1.AA, Control Pollution Degree 3

Safety notes



- Outdoor application: Only possible if no (sea) water, snow, ice, sunlight, or aggressive gases directly act on the device, and if it is ensured that the ambient conditions remain within the limit values specified in the data sheet at all times.
- The device may only be opened at the manufacturer's site. It does not contain any parts that can be replaced or repaired by the user.
- Cables must not be removed from the device.

Product features

Configurable Device The factory settings cover the most common applications. Single parameters can be modified with the Belimo Assistant 2 or ZTH US.

Simple direct mounting Simple direct mounting on the damper shaft with a universal shaft clamp, supplied with an anti-rotation mechanism to prevent the actuator from rotating.

Adjustable angle of rotation Adjustable angle of rotation with mechanical end stops.

High functional reliability The actuator is overload protected, requires no limit switches and automatically stops when the end stop is reached.

Innovative motorization The actuator uses the powerful Belimo M600 microchip in combination with the INFORM method. It provides the full starting torque from a standstill with high precision (sensorless INFORM-Drive by Prof. Schrödl).

Home position The first time the supply voltage is switched on, i.e. at the time of commissioning, the actuator carries out a synchronization. The synchronization is in the home position (0%).

The actuator then moves into the position defined by the control signal.

Adaptation An adaptation can be triggered manually by switching the direction-of-rotation switch from the left to the right twice within 5 s or with Belimo Assistant 2. Both mechanical end stops are detected during the adaptation (entire setting range).

The actuator then moves into the position defined by the control signal.

A range of settings can be made using the Belimo Assistant 2.

Accessories

Tools	**Description**	**Type**
	Service tool for wired and wireless setup, on-site operation and troubleshooting.	Belimo Assistant 2
	Connecting cable 16 ft [5 m], A: RJ11 6/4 LINK.10, B: free wire end for connection to MP/PP terminal	ZK2-GEN
	Belimo Assistant Link Bluetooth and USB to NFC and MP-Bus converter for configurable and communicative devices	LINK.10

Electrical accessories	**Description**	**Type**
	Signal simulator, Power supply AC 120 V	PS-100
	Convert Pulse Width Modulated Signal to a 2...10 V Signal for Belimo Proportional Actuators	PTA-250

Accessories

Description	Type
Cable conduit connector 1/2"	TF-CC US
Resistor, 500 Ω, 1/4" wire resistor with 6" pigtail wires	ZG-R01
Resistor kit, 50% voltage divider	ZG-R02
Transformer, AC 120 V to AC 24 V, 40 VA	ZG-X40

Electrical installation

Wire colors:
1 = black
2 = red
3 = white
5 = orange

Control on/off

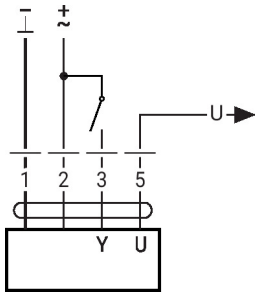

AC/DC 24 V, modulating

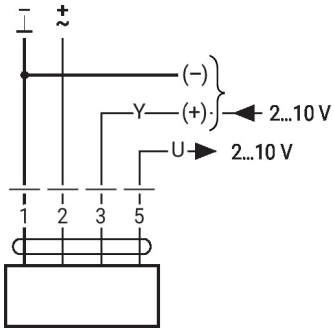

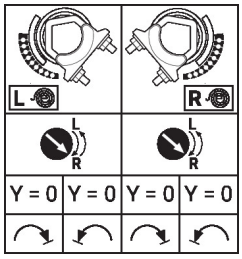

Control with 4...20 mA via external resistor

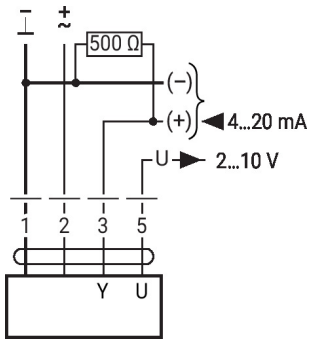

Caution:
The operating range must be set to DC 2...10 V.
The 500 Ohm resistor converts the 4...20 mA current signal to a voltage signal DC 2...10 V.

Further electrical installations

Functions with basic values (conventional mode)

Functional check

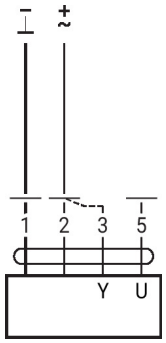

Procedure
1. Connect 24 V to connections 1 and 2
2. Disconnect connection 3:
– With direction of rotation 0: Actuator rotates to the left
– With direction of rotation 1: Actuator rotates to the right
3. Short-circuit connections 2 and 3:
– Actuator runs in opposite direction

Further electrical installations

Functions with basic values (conventional mode)

MP-Bus network topology



There are no restrictions regarding the network topology (bus, star, ring or mixed forms are permitted).
Supply and communication in one and the same 3-wire cable
• no shielding or twisting necessary
• no terminating resistors required

Connection on the MP-Bus

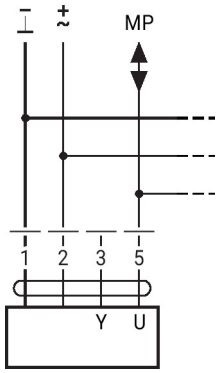

Max. 16 MP-Bus nodes

MP-Bus

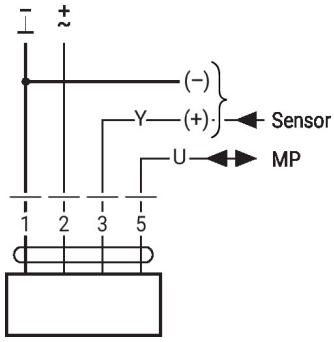

Connection of active sensors

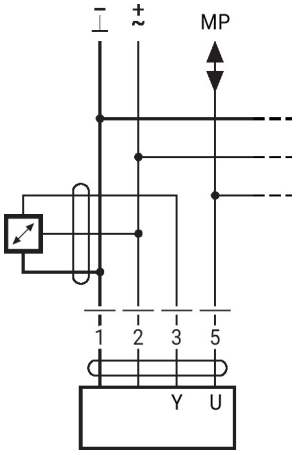

• Supply AC/DC 24 V
• Output signal 0...10 V (max. 0...32 V)
• Resolution 30 mV

Functions with specific parameters (configuration necessary)

Override control and limiting with AC 24 V with relay contacts

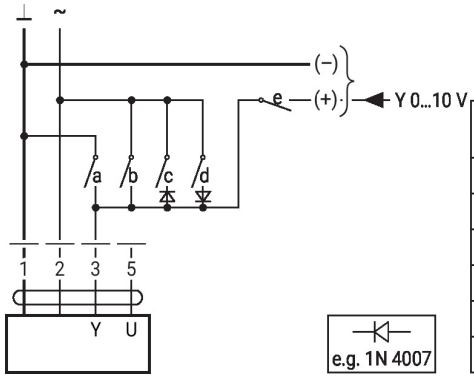

1	2	a	b	c	d	e	M	B
							Close	Close
							MIN	-
							MID	MID
							MAX	MAX
							Open	Open
							Y	Y

M = modulating
B = Bus

Further electrical installations

Functions with specific parameters (configuration necessary)

Control 3-point with AC 24 V

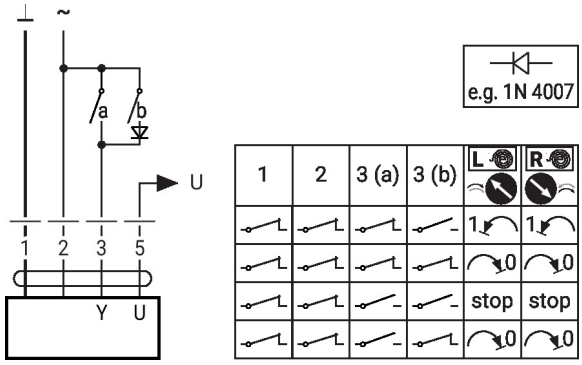

Override control and limiting with AC 24 V with rotary switch

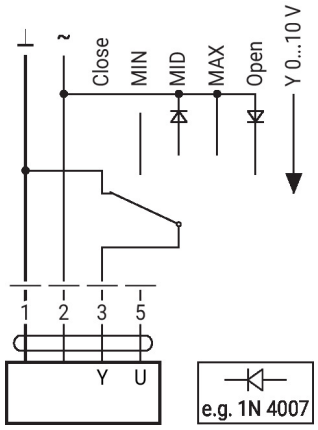

Caution:
The "Close" function is only guaranteed if the start point of the operating range is defined as min. 0.5 V.

Operating controls and indicators

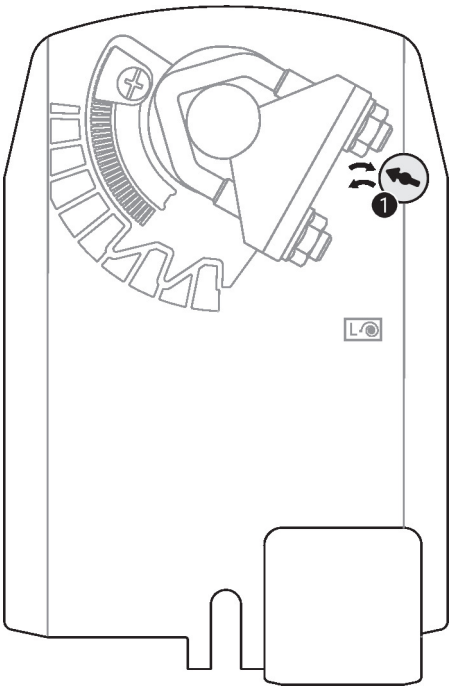

1 MP addressing
Move direction of rotation switch in opposite position and backwards (within 4 seconds)

Service

Using Belimo Assistant 2, device parameters can be modified. Belimo Assistant 2 can operate on a smartphone, tablet, or PC. The available connection options vary depending on the hardware on which Belimo Assistant 2 is installed.

For more information about Belimo Assistant 2, refer to the Quick Guide – Belimo Assistant 2.

Service

Wired connection

Alternatively, the Belimo devices can be accessed by connecting Belimo Assistant Link to the USB port on a PC or laptop and to the service socket or MP-Bus wire on the device.

Belimo Assistant 2 acts as MP client. Therefore, no other MP client shall be connected to the device.

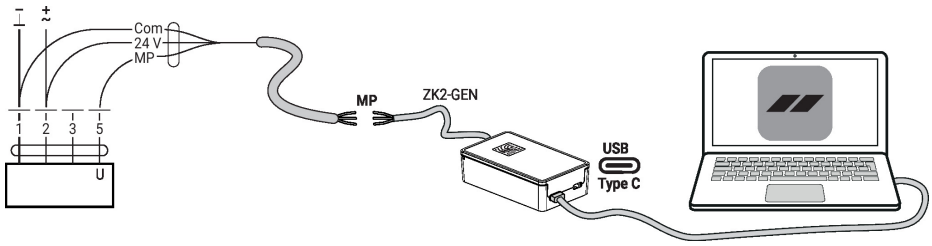

Dimensions

Shaft length

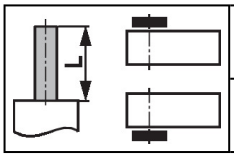

Min. 84
Min. 0.75" [20 mm]

Clamping range

6...12.7	6...12.7

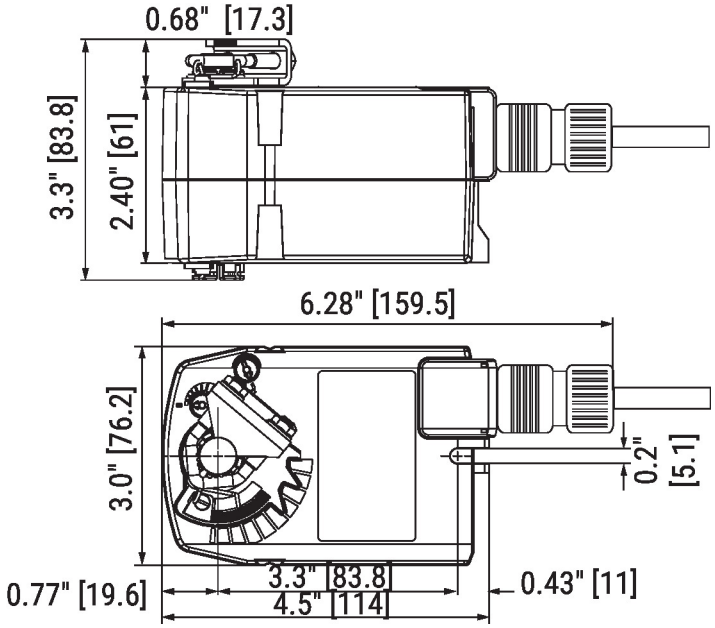

Further documentation

- Overview MP Cooperation Partners
- Tool connections
- Introduction to MP-Bus Technology
- Quick Guide – Belimo Assistant 2