BELIMO

# Technical data sheet B218

2-way, Characterized Control Valve, Stainless Steel Ball and Stem



Picture may differ from product

5-year warranty

## Type overview

| Type | DN |
|---|---|
| B218 | 3/4" [20] |

## Technical data

| | | |
|---|---|---|
| **Functional data** | Valve size [mm] | 0.75" [20] |
| | Fluid | chilled or hot water, up to 60% glycol |
| | Fluid Temp Range (water) | 0...250°F [-18...120°C] |
| | Body Pressure Rating | 600 psi |
| | Close-off pressure Δps | 200 psi |
| | Flow characteristic | equal percentage |
| | Leakage rate | 0% for A–AB |
| | Pipe connection | Internal thread<br>NPT (female) |
| | Servicing | maintenance-free |
| | Flow Pattern | 2-way |
| | Controllable flow range | 75° |
| | Cv | 7.4 |
| **Materials** | Valve body | Nickel-plated brass body |
| | Stem | stainless steel |
| | Stem seal | EPDM (lubricated) |
| | Seat | PTFE |
| | Characterized disc | TEFZEL® |
| | O-ring | EPDM (lubricated) |
| | Ball | stainless steel |
| **Suitable actuators** | Non Fail-Safe | TR<br>LRB(X)<br>LRQB(X)<br>NRB(X) N4 |
| | Spring | TFRB(X)<br>LF |

## Safety notes

- WARNING: This product can expose you to lead which is known to the State of California to cause cancer and reproductive harm. For more information go to www.p65warnings.ca.gov

## Product features

**Application**

This valve is typically used in air handling units on heating or cooling coils, and fan coil unit heating or cooling coils. Some other common applications include Unit Ventilators, VAV box re-heat coils and bypass loops. This valve is suitable for use in a hydronic system with variable flow.

**Flow/Mounting details**

Two-way valves should be installed with the disc upstream.

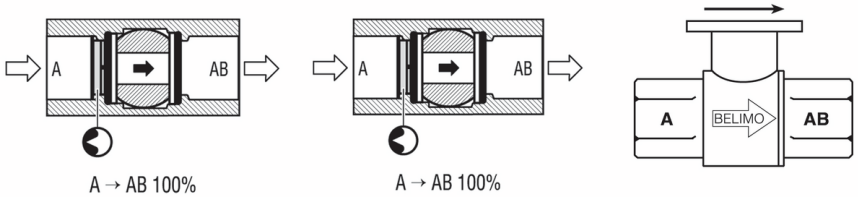


## Dimensions

| Type | DN | Weight |
|---|---|---|
| B218 | 3/4" [20] | 0.73 lb [0.33 kg] |

LRB, LRX

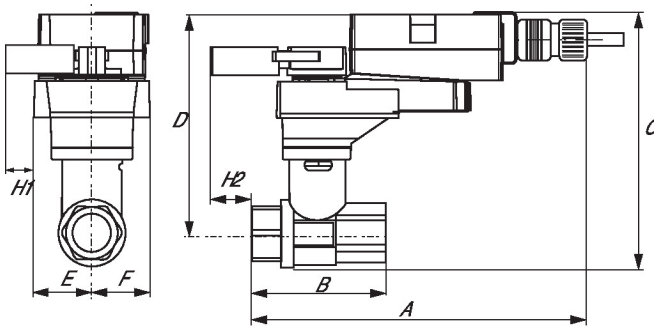


| A | B | C | D | E | F | H1 | H2 |
|---|---|---|---|---|---|---|---|
| 9.4" [239] | 2.7" [69] | 5.8" [147] | 5.1" [129] | 1.3" [33] | 1.3" [33] | 1.2" [30] | 1" [25] |

TR

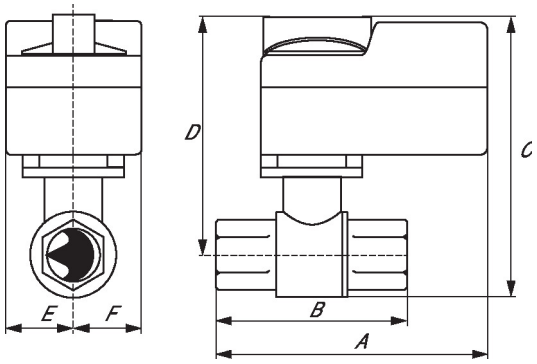


| A | B | C | D | E | F |
|---|---|---|---|---|---|
| 4.0" [102] | 2.7" [69] | 5.39" [137] | 5.1" [129] | 1.3" [33] | 1.3" [33] |

TFRB, TFRX

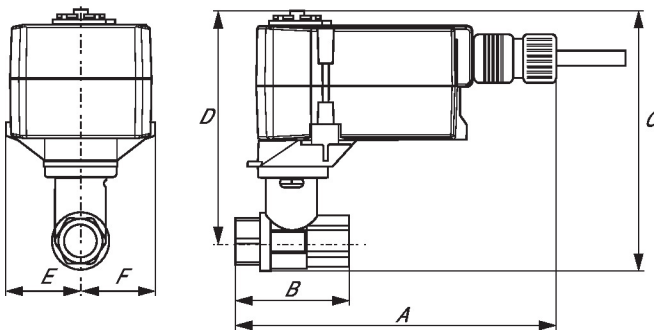


| A | B | C | D | E | F |
|---|---|---|---|---|---|
| 7.0" [178] | 2.7" [69] | 5.5" [139] | 4.8" [122] | 1.5" [39] | 1.5" [39] |

## Dimensions

LF

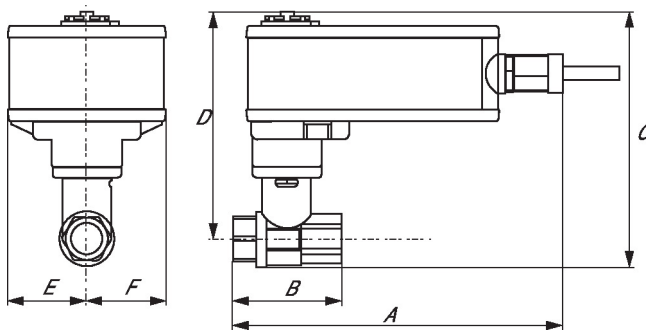


| A | B | C | D | E | F |
|---|---|---|---|---|---|
| 8.6" [218] | 2.7" [69] | 6.3" [159] | 5.6" [142] | 1.8" [46] | 1.8" [46] |

ARB N4, ARX N4, NRB N4, NRX N4

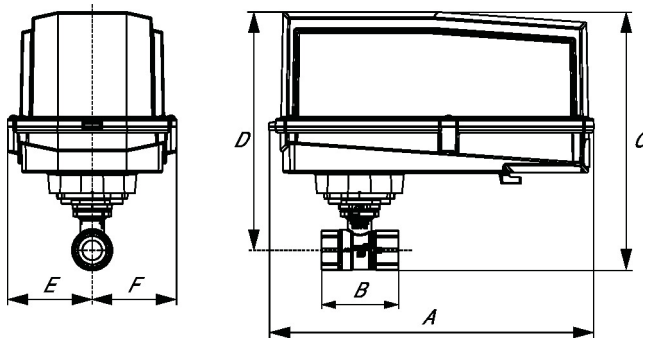


| A | B | C | D | E | F |
|---|---|---|---|---|---|
| 11.4" [289] | 2.7" [69] | 7.8" [199] | 7.1" [181] | 3.1" [80] | 3.1" [80] |

- Nominal voltage AC/DC 24 V
- Control Modulating, On/Off, Floating point, Communicative
- Position feedback 2...10 V

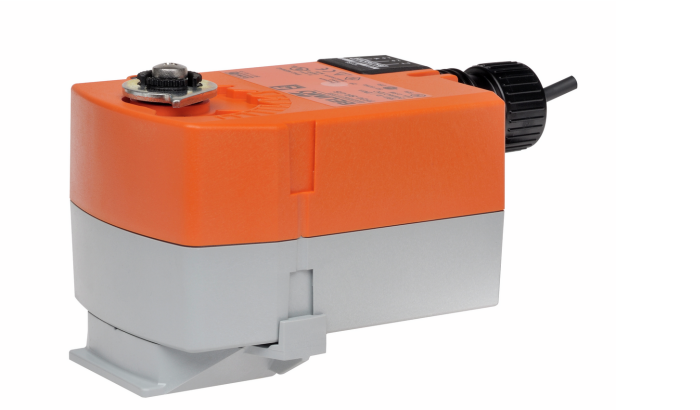

Picture may differ from product

## Technical data

| | | |
|---|---|---|
| **Electrical data** | Nominal voltage | AC/DC 24 V |
| | Nominal voltage frequency | 50/60 Hz |
| | Nominal voltage range | AC 19.2...28.8 V / DC 21.6...35.0 V |
| | Power consumption in operation | 1.3 W |
| | Power consumption in rest position | 0.6 W |
| | Transformer sizing | 2.6 VA |
| | Connection supply/control | Cable 3 ft. [1 m], 4x 0.75 mm² |
| | Parallel operation | Yes (note the performance data) |
| **Data bus communication** | Communicative control | MP-Bus |
| | Number of nodes | MP-Bus max. 16 |
| **Functional data** | Operating range Y | 2...10 V |
| | Input impedance | 100 kΩ |
| | Operating range Y variable | Start point 0.5...30 V<br>End point 2.5...32 V |
| | Operating modes optional | variable (VDC, PWM, on/off, floating point) |
| | Position feedback U | 2...10 V |
| | Position feedback U note | Max. 1 mA |
| | Position feedback U variable | Start point 0.5...8 V<br>End point 2.5...10 V |
| | Position accuracy | ±5% |
| | Direction of motion variable | electronically reversible |
| | Manual override | No |
| | Angle of rotation | Max. 95° |
| | Angle of rotation note | adjustable starting at 37% in 2.5% steps (with mechanical end stop) |
| | Running Time (Motor) | 95 s / |
| | Running time motor variable | 75...300 s |
| | Running time fail-safe | <25 s @ -20...50°C, <60 s @ -30°C |
| | Sound power level, fail-safe | 36 dB(A) |
| | Adaptation Setting Range | with Belimo Assistant 2 |
| **Safety data** | Power source UL | Class 2 Supply |
| | Degree of protection NEMA/UL | NEMA 2 |
| | Housing | UL Enclosure Type 2 |
| | Agency Listing | cULus acc. to UL60730-1A/-2-14, CAN/CSA E60730-1:02, CE acc. to 2014/30/EU |
| | Quality Standard | ISO 9001 |

## Technical data

| | | |
|---|---|---|
| **Safety data** | UL 2043 Compliant | Suitable for use in air plenums per Section 300.22(C) of the NEC and Section 602 of the IMC |
| | Ambient humidity | Max. 95% RH, non-condensing |
| | Ambient temperature | -22...122°F [-30...50°C] |
| | Storage temperature | -40...176°F [-40...80°C] |
| | Servicing | maintenance-free |
| **Weight** | Weight | 1.4 lb [0.62 kg] |

**Footnotes** †Rated Impulse Voltage 800V, Type of action 1.AA, Control Pollution Degree 3

## Safety notes



- Outdoor application: Only possible if no (sea) water, snow, ice, sunlight, or aggressive gases directly act on the device, and if it is ensured that the ambient conditions remain within the limit values specified in the data sheet at all times.
- The device may only be opened at the manufacturer's site. It does not contain any parts that can be replaced or repaired by the user.
- Cables must not be removed from the device.

## Product features

**Configurable Device** The factory settings cover the most common applications. Single parameters can be modified with the Belimo Assistant 2 or ZTH US.

**Simple direct mounting** Simple direct mounting on the damper shaft with a universal shaft clamp, supplied with an anti-rotation mechanism to prevent the actuator from rotating.

**Adjustable angle of rotation** Adjustable angle of rotation with mechanical end stops.

**High functional reliability** The actuator is overload protected, requires no limit switches and automatically stops when the end stop is reached.

**Innovative motorization** The actuator uses the powerful Belimo M600 microchip in combination with the INFORM method. It provides the full starting torque from a standstill with high precision (sensorless INFORM-Drive by Prof. Schrödl).

**Home position** The first time the supply voltage is switched on, i.e. at the time of commissioning, the actuator carries out a synchronization. The synchronization is in the home position (0%).

The actuator then moves into the position defined by the control signal.

**Adaptation** An adaptation can be triggered manually by switching the direction-of-rotation switch from the left to the right twice within 5 s or with Belimo Assistant 2. Both mechanical end stops are detected during the adaptation (entire setting range).

The actuator then moves into the position defined by the control signal.

A range of settings can be made using the Belimo Assistant 2.

## Accessories

| **Tools** | **Description** | **Type** |
|---|---|---|
| | Service tool for wired and wireless setup, on-site operation and troubleshooting. | Belimo Assistant 2 |
| | Connecting cable 16 ft [5 m], A: RJ11 6/4 LINK.10, B: free wire end for connection to MP/PP terminal | ZK2-GEN |
| | Belimo Assistant Link Bluetooth and USB to NFC and MP-Bus converter for configurable and communicative devices | LINK.10 |

| **Electrical accessories** | **Description** | **Type** |
|---|---|---|
| | Signal simulator, Power supply AC 120 V | PS-100 |
| | Convert Pulse Width Modulated Signal to a 2...10 V Signal for Belimo Proportional Actuators | PTA-250 |

## Accessories

| Description | Type |
|---|---|
| Cable conduit connector 1/2" | TF-CC US |
| Resistor, 500 Ω, 1/4" wire resistor with 6" pigtail wires | ZG-R01 |
| Resistor kit, 50% voltage divider | ZG-R02 |
| Transformer, AC 120 V to AC 24 V, 40 VA | ZG-X40 |

## Electrical installation

**Wire colors:**
1 = black
2 = red
3 = white
5 = orange

Control on/off

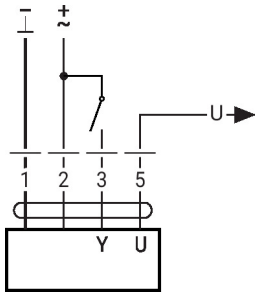


AC/DC 24 V, modulating

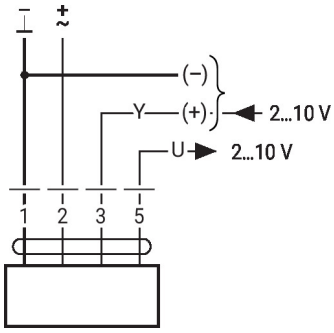


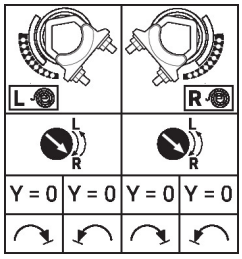


Control with 4...20 mA via external resistor

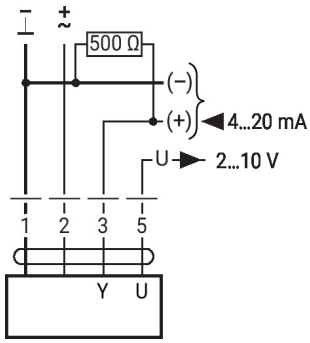


Caution:
The operating range must be set to DC 2...10 V.
The 500 Ohm resistor converts the 4...20 mA current signal to a voltage signal DC 2...10 V.

## Further electrical installations

### Functions with basic values (conventional mode)

Functional check

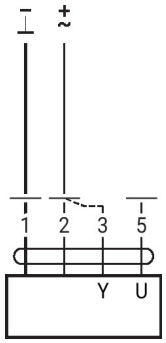


**Procedure**
1. Connect 24 V to connections 1 and 2
2. Disconnect connection 3:
– With direction of rotation 0: Actuator rotates to the left
– With direction of rotation 1: Actuator rotates to the right
3. Short-circuit connections 2 and 3:
– Actuator runs in opposite direction

## Further electrical installations

### Functions with basic values (conventional mode)

MP-Bus network topology



There are no restrictions regarding the network topology (bus, star, ring or mixed forms are permitted).
Supply and communication in one and the same 3-wire cable
• no shielding or twisting necessary
• no terminating resistors required

Connection on the MP-Bus

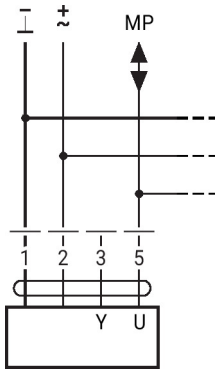


Max. 16 MP-Bus nodes

MP-Bus

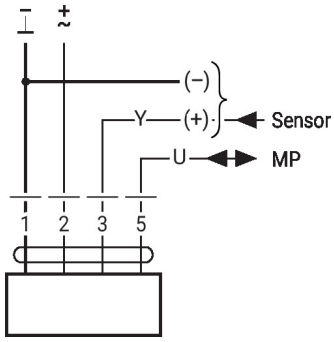


Connection of active sensors

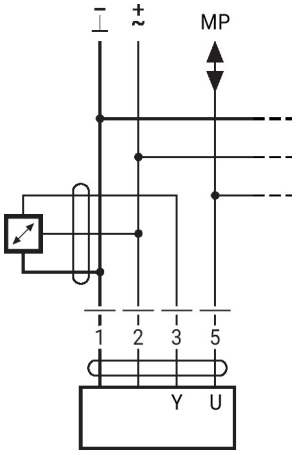


• Supply AC/DC 24 V
• Output signal 0...10 V (max. 0...32 V)
• Resolution 30 mV

### Functions with specific parameters (configuration necessary)

Override control and limiting with AC 24 V with relay contacts

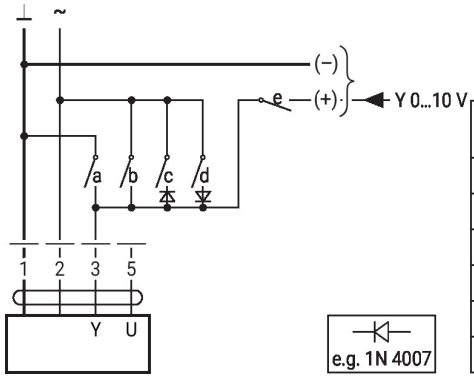





| 1 | 2 | a | b | c | d | e | M | B |
|---|---|---|---|---|---|---|---|---|
| | | | | | | | Close | Close |
| | | | | | | | MIN | - |
| | | | | | | | MID | MID |
| | | | | | | | MAX | MAX |
| | | | | | | | Open | Open |
| | | | | | | | Y | Y |

M = modulating
B = Bus

## Further electrical installations

### Functions with specific parameters (configuration necessary)

Control 3-point with AC 24 V

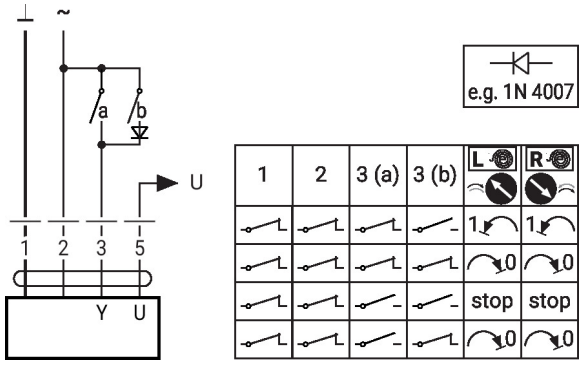


Override control and limiting with AC 24 V with rotary switch

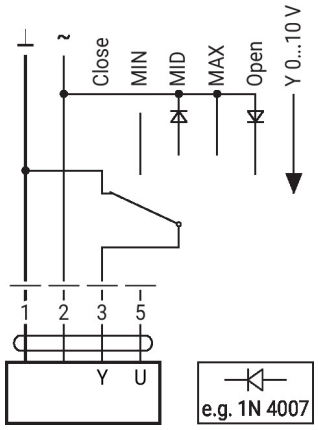


Caution:
The "Close" function is only guaranteed if the start point of the operating range is defined as min. 0.5 V.

## Operating controls and indicators

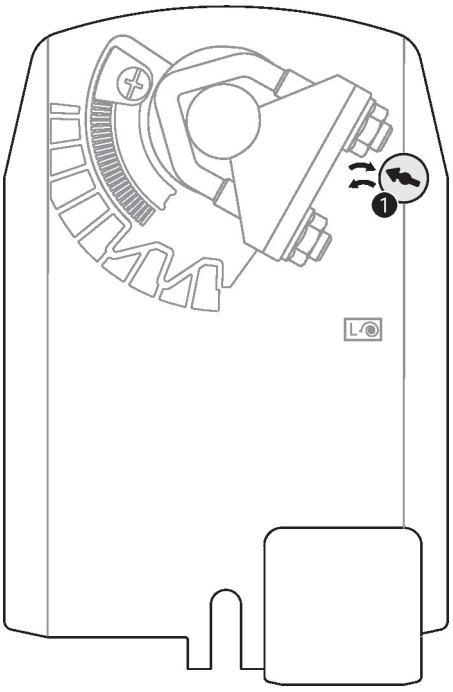


**1 MP addressing**
Move direction of rotation switch in opposite position and backwards (within 4 seconds)

## Service

Using Belimo Assistant 2, device parameters can be modified. Belimo Assistant 2 can operate on a smartphone, tablet, or PC. The available connection options vary depending on the hardware on which Belimo Assistant 2 is installed.

For more information about Belimo Assistant 2, refer to the Quick Guide – Belimo Assistant 2.

## Service

**Wired connection**

Alternatively, the Belimo devices can be accessed by connecting Belimo Assistant Link to the USB port on a PC or laptop and to the service socket or MP-Bus wire on the device.

Belimo Assistant 2 acts as MP client. Therefore, no other MP client shall be connected to the device.

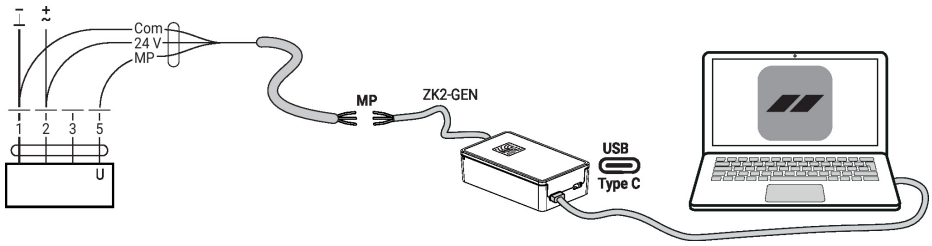


## Dimensions

**Shaft length**

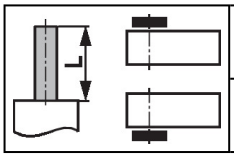


| |
|---|
| Min. 84 |
| Min. 0.75" [20 mm] |

**Clamping range**

| | |
|---|---|
| 6...12.7 | 6...12.7 |

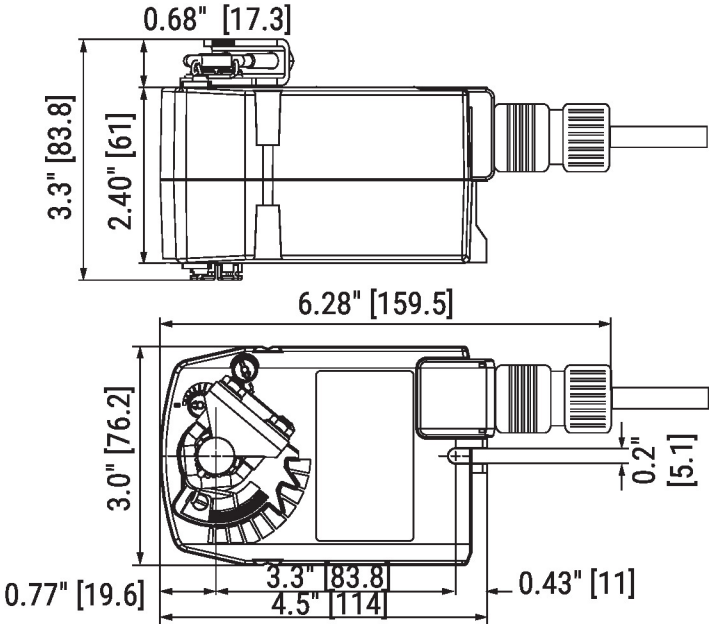


## Further documentation

- Overview MP Cooperation Partners
- Tool connections
- Introduction to MP-Bus Technology
- Quick Guide – Belimo Assistant 2