BELIMO

Technical data sheet B218

2-way, Characterized Control Valve, Stainless Steel Ball and Stem



Picture may differ from product

5-year warranty

Type overview

Type	DN
B218	3/4" [20]

Technical data

Functional data	Valve size [mm]	0.75" [20]
	Fluid	chilled or hot water, up to 60% glycol
	Fluid Temp Range (water)	0...250°F [-18...120°C]
	Body Pressure Rating	600 psi
	Close-off pressure Δps	200 psi
	Flow characteristic	equal percentage
	Leakage rate	0% for A–AB
	Pipe connection	Internal thread NPT (female)
	Servicing	maintenance-free
	Flow Pattern	2-way
	Controllable flow range	75°
	Cv	7.4
Materials	Valve body	Nickel-plated brass body
	Stem	stainless steel
	Stem seal	EPDM (lubricated)
	Seat	PTFE
	Characterized disc	TEFZEL®
	O-ring	EPDM (lubricated)
	Ball	stainless steel
Suitable actuators	Non Fail-Safe	TR LRB(X) LRQB(X) NRB(X) N4
	Spring	TFRB(X) LF

Safety notes

- WARNING: This product can expose you to lead which is known to the State of California to cause cancer and reproductive harm. For more information go to www.p65warnings.ca.gov

Product features

Application

This valve is typically used in air handling units on heating or cooling coils, and fan coil unit heating or cooling coils. Some other common applications include Unit Ventilators, VAV box re-heat coils and bypass loops. This valve is suitable for use in a hydronic system with variable flow.

Flow/Mounting details

Two-way valves should be installed with the disc upstream.

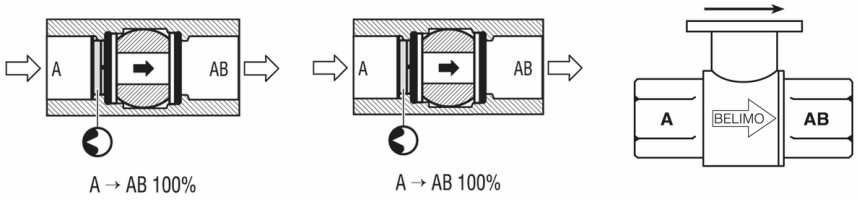

Dimensions

Type	DN	Weight
B218	3/4" [20]	0.73 lb [0.33 kg]

LRB, LRX

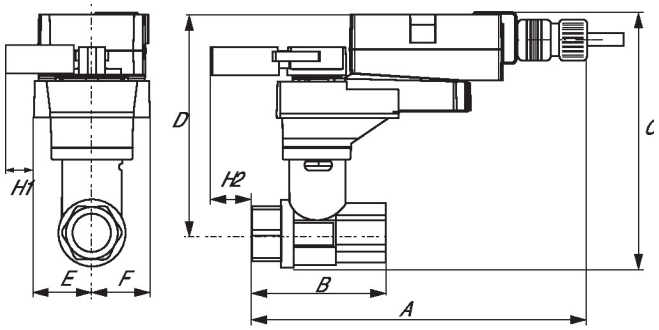

A	B	C	D	E	F	H1	H2
9.4" [239]	2.7" [69]	5.8" [147]	5.1" [129]	1.3" [33]	1.3" [33]	1.2" [30]	1" [25]

TR

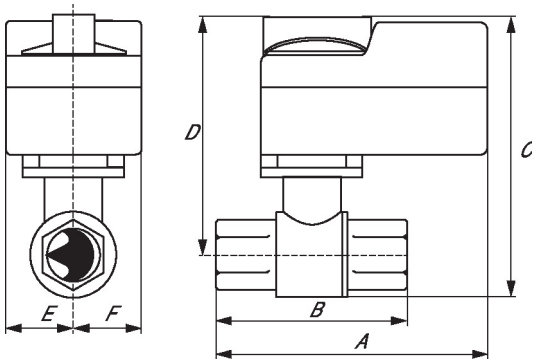

A	B	C	D	E	F
4.0" [102]	2.7" [69]	5.39" [137]	5.1" [129]	1.3" [33]	1.3" [33]

TFRB, TFRX

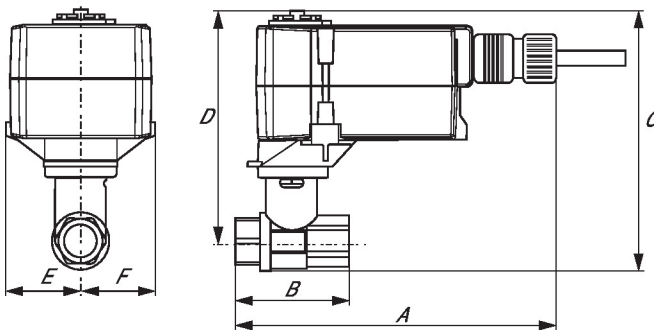

A	B	C	D	E	F
7.0" [178]	2.7" [69]	5.5" [139]	4.8" [122]	1.5" [39]	1.5" [39]

Dimensions

LF

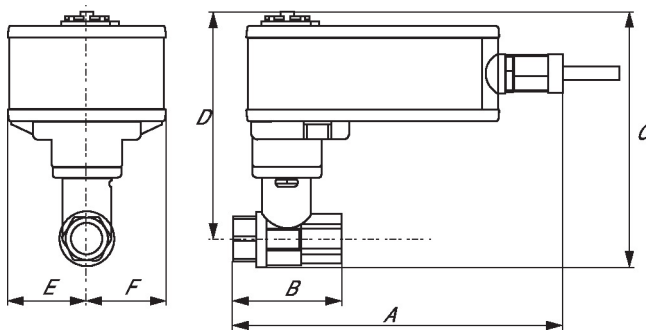

A	B	C	D	E	F
8.6" [218]	2.7" [69]	6.3" [159]	5.6" [142]	1.8" [46]	1.8" [46]

ARB N4, ARX N4, NRB N4, NRX N4

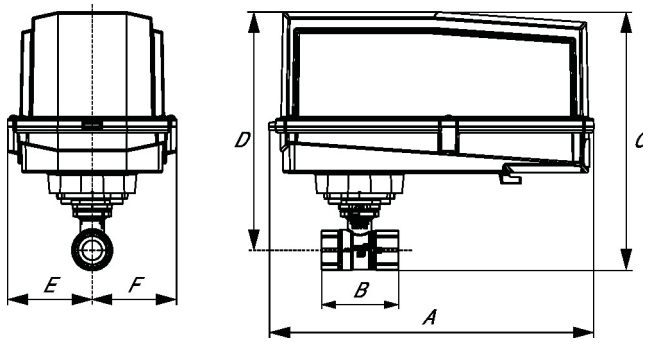

A	B	C	D	E	F
11.4" [289]	2.7" [69]	7.8" [199]	7.1" [181]	3.1" [80]	3.1" [80]