2-way, Characterized Control Valve, Stainless Steel Ball and Stem



5-year warranty

Type overview

Type	DN
B219	20

Technical data

Functional data	Valve size [mm]	0.75" [20]
	Fluid	chilled or hot water, up to 60% glycol
	Fluid Temp Range (water)	0...250°F [-18...120°C]
	Body Pressure Rating	600 psi
	Close-off pressure Δps	200 psi
	Flow characteristic	equal percentage
	Leakage rate	0% for A – AB
	Pipe connection	Internal thread NPT (female)
	Servicing	maintenance-free
	Flow Pattern	2-way
	Controllable flow range	75°
	Cv	10
Materials	Valve body	Nickel-plated brass body
	Stem	stainless steel
	Stem seal	EPDM (lubricated)
	Seat	PTFE
	Characterized disc	TEFZEL®
	O-ring	EPDM (lubricated)
	Ball	stainless steel
Suitable actuators	Non Fail-Safe	TR LRB(X) LRQB(X) NRB(X) N4
	Spring	TFRB(X) LF

Safety notes

- WARNING: This product can expose you to lead which is known to the State of California to cause cancer and reproductive harm. For more information go to www.p65warnings.ca.gov

Product features

Application

This valve is typically used in air handling units on heating or cooling coils, and fan coil unit heating or cooling coils. Some other common applications include Unit Ventilators, VAV box re-heat coils and bypass loops. This valve is suitable for use in a hydronic system with variable flow.

Flow/Mounting details

Two-way valves should be installed with the disc upstream.

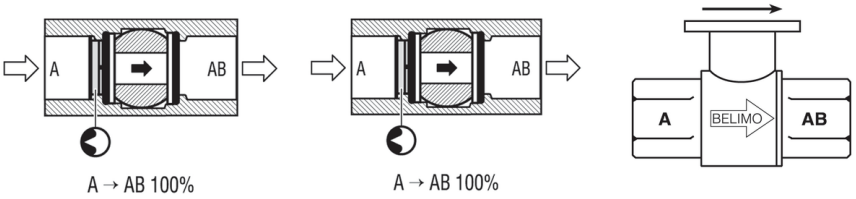

Dimensions

Type	DN	Weight
B219	20	0.73 lb [0.33 kg]

LRB, LRX

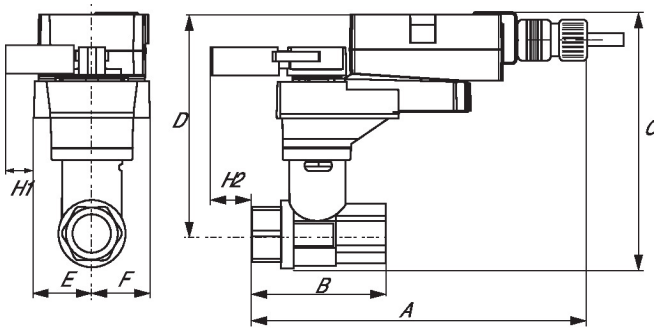

A	B	C	D	E	F	H1	H2
9.4" [239]	2.7" [69]	5.8" [147]	5.1" [129]	1.3" [33]	1.3" [33]	1.2" [30]	1" [25]

TR

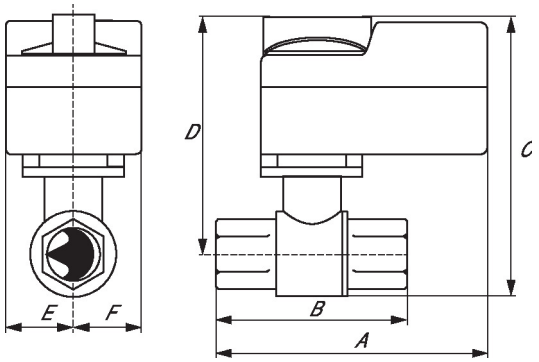

A	B	C	D	E	F
4.0" [102]	2.7" [69]	5.4" [137]	5.1" [129]	1.3" [33]	1.3" [33]

Dimensions

TFRB, TFRX

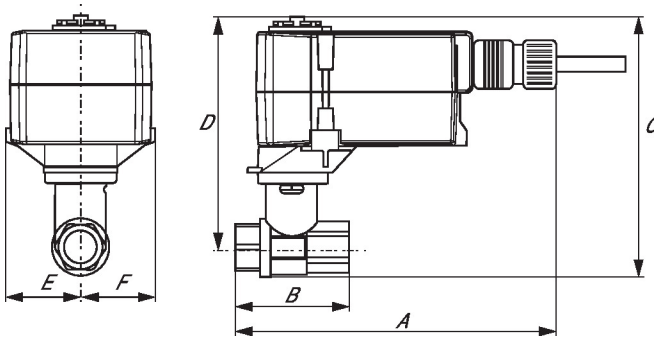

A	B	C	D	E	F
7.0" [178]	2.7" [69]	5.5" [139]	4.8" [122]	1.5" [39]	1.5" [39]

LF

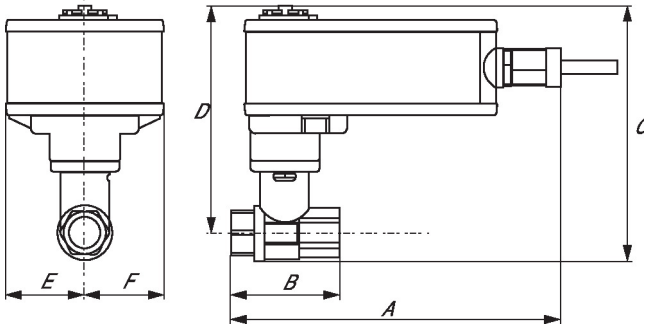

A	B	C	D	E	F
8.6" [218]	2.7" [69]	6.3" [159]	5.6" [142]	1.8" [46]	1.8" [46]

ARB N4, ARX N4, NRB N4, NRX N4

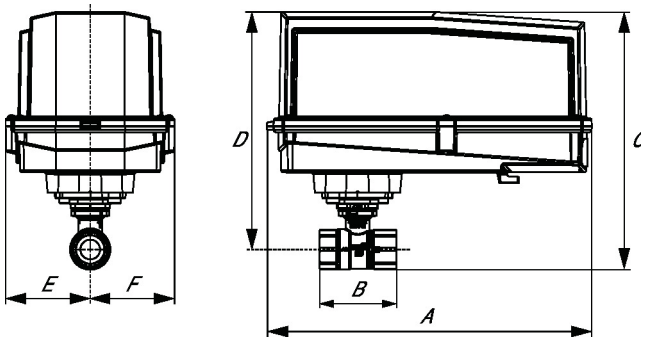

A	B	C	D	E	F
11.4" [289]	2.7" [69]	7.8" [199]	7.1" [181]	3.1" [80]	3.1" [80]

BELIMO

On/Off, Spring return, 100...240 V

Technical data sheet TFRX120-S



5-year warranty

Technical data

Electrical data	Nominal voltage	AC 100...240 V
	Nominal voltage frequency	50/60 Hz
	Nominal voltage range	AC 85...265 V
	Power consumption in operation	2.5 W
	Power consumption in rest position	1.3 W
	Transformer sizing	5 VA
	Auxiliary switch	1x SPDT, 1 mA...3 A (0.5 A inductive), DC 5 V...AC 250 V, adjustable 0...95°
	Switching capacity auxiliary switch	1 mA...3 A (0.5 A inductive), DC 5 V...AC 250 V
	Electrical Connection	(2) 18 GA appliance cables, 1 m, 3 m or 5 m, with 1/2" NPT conduit connectors
	Overload Protection	electronic throughout 0...95° rotation
Functional data	Position feedback U note	No Feedback
	Direction of motion motor	selectable by ccw/cw mounting
	Direction of motion fail-safe	reversible with cw/ccw mounting
	Angle of rotation	Max. 95°
	Angle of rotation note	adjustable with mechanical stop
	Running Time (Motor)	75 s
	Running time fail-safe	<75 s @ 20°C
	Noise level, motor	50 dB(A)
	Noise level, fail-safe	50 dB(A)
	Position indication	Mechanical
Safety data	Power source UL	Class 2 Supply
	Degree of protection IEC/EN	IP42
	Degree of protection NEMA/UL	NEMA 2
	Enclosure	UL Enclosure Type 2
	Agency Listing	cULus acc. to UL60730-1A/-2-14, CAN/CSA E60730-1:02, CE acc. to 2014/30/EU
	Quality Standard	ISO 9001
	UL 2043 Compliant	Suitable for use in air plenums per Section 300.22(C) of the NEC and Section 602 of the IMC
	Ambient humidity	Max. 95% RH, non-condensing
	Ambient temperature	-22...122°F [-30...50°C]
	Storage temperature	-40...176°F [-40...80°C]
	Servicing	maintenance-free
Weight	Weight	1.6 lb [0.70 kg]
Materials	Housing material	UL94-5VA

Footnotes †Rated Impulse Voltage 800V, Type of action 1.AA, Control Pollution Degree 3

Electrical installation

INSTALLATION NOTES

A Actuators with appliance cables are numbered.

1 Provide overload protection and disconnect as required.

2 Actuators may be connected in parallel. Power consumption and input impedance must be observed.

44 One built-in auxiliary switch (1x SPDT), for end position indication, interlock control, fan startup, etc.

Apply only AC line voltage or only UL-Class 2 voltage to the terminals of auxiliary switches. Mixed or combined operation of line voltage/safety extra low voltage is not allowed.

Meets cULus requirements without the need of an electrical ground connection.

Warning! Live electrical components!
During installation, testing, servicing and troubleshooting of this product, it may be necessary to work with live electrical components. Have a qualified licensed electrician or other individual who has been properly trained in handling live electrical components perform these tasks. Failure to follow all electrical safety precautions when exposed to live electrical components could result in death or serious injury.

Wiring diagrams

On/Off

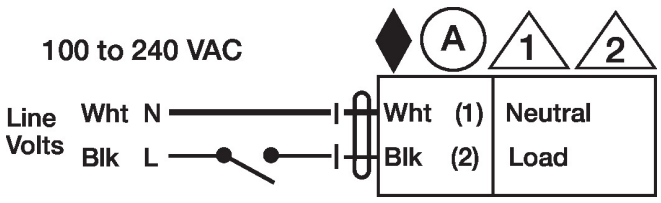

Auxiliary Switches

