Technical data sheet B222

2-way, Characterized Control Valve, Stainless Steel Ball and Stem



Picture may differ from product

5-year warranty

Type overview

Type	DN
B222	1" [25]

Technical data

Functional data	Valve size [mm]	1" [25]
	Fluid	chilled or hot water, up to 60% glycol
	Fluid Temp Range (water)	0...250°F [-18...120°C]
	Body Pressure Rating	600 psi
	Close-off pressure Δps	200 psi
	Flow characteristic	equal percentage
	Leakage rate	0% for A–AB
	Pipe connection	Internal thread NPT (female)
	Servicing	maintenance-free
	Flow Pattern	2-way
	Controllable flow range	75°
	Cv	7.4
Materials	Valve body	Nickel-plated brass body
	Stem	stainless steel
	Stem seal	EPDM (lubricated)
	Seat	PTFE
	Characterized disc	TEFZEL®
	O-ring	EPDM (lubricated)
	Ball	stainless steel
Suitable actuators	Non Fail-Safe	LRB(X) LRQB(X) NRB(X) N4
	Spring	LF

Safety notes

- WARNING: This product can expose you to lead which is known to the State of California to cause cancer and reproductive harm. For more information go to www.p65warnings.ca.gov

Product features

Application

This valve is typically used in air handling units on heating or cooling coils, and fan coil unit heating or cooling coils. Some other common applications include Unit Ventilators, VAV box re-heat coils and bypass loops. This valve is suitable for use in a hydronic system with variable flow.

Flow/Mounting details

Two-way valves should be installed with the disc upstream.

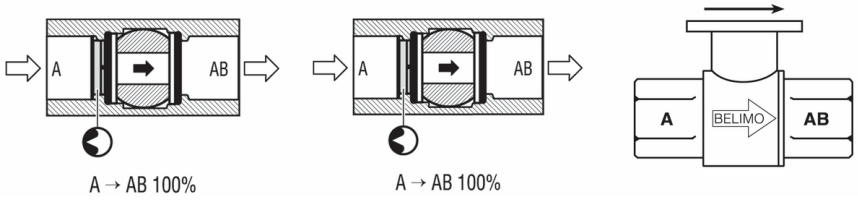

Dimensions

Type	DN	Weight
B222	1" [25]	1.1 lb [0.49 kg]

LRB, LRX

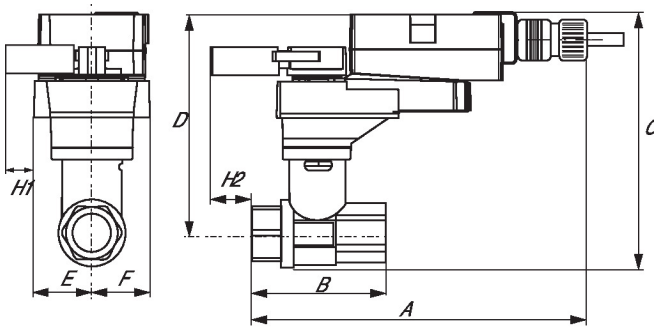

A	B	C	D	E	F	H1	H2
9.4" [239]	3.1" [78]	6.3" [159]	5.4" [137]	1.3" [33]	1.3" [33]	1.2" [30]	0.9" [23]

LF

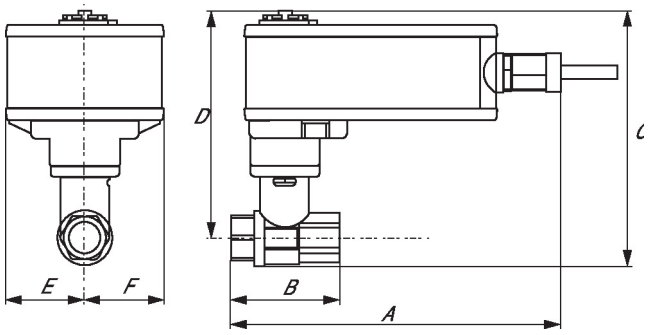

A	B	C	D	E	F
8.1" [206]	3.1" [78]	6.5" [165]	5.6" [142]	1.8" [46]	1.8" [46]

ARB N4, ARX N4, NRB N4, NRX N4

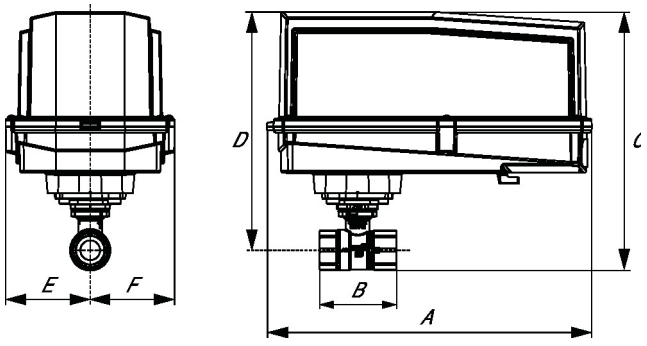

A	B	C	D	E	F
11.4" [289]	3.1" [78]	7.8" [199]	7.1" [181]	3.1" [80]	3.1" [80]

BELIMO

Technical data sheet LRX24-SR

Modulating, Non fail-safe, 24 V



Picture may differ from product

5-year warranty

Technical data

Electrical data	Nominal voltage	AC/DC 24 V
	Nominal voltage frequency	50/60 Hz
	Nominal voltage range	AC 19.2...28.8 V / DC 21.6...28.8 V
	Power consumption in operation	1.5 W
	Power consumption in rest position	0.2 W
	Transformer sizing	3 VA
	Electrical Connection	18 AWG plenum cable with 1/2" NPT conduit connector, degree of protection NEMA 2 / IP54, 1 m, 3 m, and 5 m
	Overload Protection	electronic thoughout 0...90° rotation
	Electrical Protection	actuators are double insulated
Functional data	Operating range Y	2...10 V
	Operating range Y note	4...20 mA w/ ZG-R01 (500 Ω, 1/4 W resistor)
	Input impedance	100 kΩ for 2...10 V (0.1 mA), 500 Ω for 4...20 mA
	Position feedback U	2...10 V
	Position feedback U note	Max. 1 mA
	Direction of motion motor	selectable with switch 0/1
	Manual override	external push button
	Angle of rotation	90°
	Angle of rotation note	adjustable with mechanical stop
	Running Time (Motor)	90 s / 90°
	Running time motor variable	150, 90, 45, 35 s
	Sound power level, motor	35 dB(A)
	Position indication	Mechanical, pluggable
Safety data	Power source UL	Class 2 Supply
	Degree of protection NEMA/UL	NEMA 2
	Housing	UL Enclosure Type 2
	Agency Listing	cULus acc. to UL60730-1A/-2-14, CAN/CSA E60730-1:02, CE acc. to 2014/30/EU
	Quality Standard	ISO 9001
	UL 2043 Compliant	Suitable for use in air plenums per Section 300.22(C) of the NEC and Section 602 of the IMC
	Ambient humidity	Max. 95% RH, non-condensing
	Ambient temperature	-22...122°F [-30...50°C]

Technical data

Safety data	Storage temperature	-40...176°F [-40...80°C]
	Servicing	maintenance-free
Weight	Weight	1.0 lb [0.46 kg]
Materials	Housing material	Galvanized steel and plastic housing

Footnotes †Rated Impulse Voltage 800V, Type action 1.B, Control Pollution Degree 3.

Accessories

Electrical accessories	Description	Type
	Auxiliary switch 1x SPDT add-on	S1A
	Auxiliary switch 2x SPDT add-on	S2A
	Feedback potentiometer 140 Ω add-on, grey	P140A GR
	Feedback potentiometer 1 kΩ add-on, grey	P1000A GR
	Feedback potentiometer 10 kΩ add-on, grey	P10000A GR
	Feedback potentiometer 2.8 kΩ add-on, grey	P2800A GR
	Feedback potentiometer 500 Ω add-on, grey	P500A GR
	Feedback potentiometer 5 kΩ add-on, grey	P5000A GR

Electrical installation

Wire colors:
1 = black
2 = red
3 = white
5 = orange

AC/DC 24 V, modulating

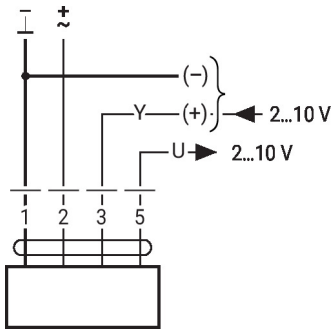

Override control (frost protection circuit)

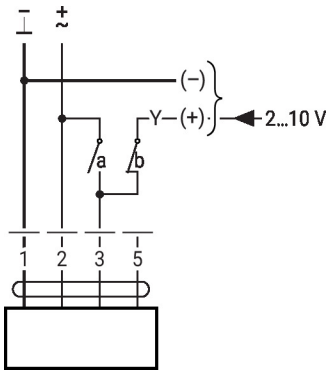

1	2	3 (a)	3 (b)	
				A - AB = 100%
				A - AB = 0%
			2 V	A - AB = 0%
			10 V	A - AB = 100%