2-way, Characterized Control Valve, Stainless Steel Ball and Stem



5-year warranty

Type overview

Type	DN
B232	32

Technical data

Functional data	Valve size [mm]	1.25" [32]
	Fluid	chilled or hot water, up to 60% glycol
	Fluid Temp Range (water)	0...250°F [-18...120°C]
	Body Pressure Rating	400 psi
	Close-off pressure Δps	200 psi
	Flow characteristic	equal percentage
	Leakage rate	0% for A – AB
	Pipe connection	Internal thread NPT (female)
	Servicing	maintenance-free
	Flow Pattern	2-way
	Controllable flow range	75°
	Cv	37
	No Characterized Disc	TRUE
Materials	Valve body	Nickel-plated brass body
	Stem	stainless steel
	Stem seal	EPDM (lubricated)
	Seat	PTFE
	Characterized disc	TEFZEL®
	O-ring	EPDM (lubricated)
	Ball	stainless steel
Suitable actuators	Non Fail-Safe	ARB(X) NRQB(X) ARB(X) N4
	Spring	AFRB(X)

Safety notes

- WARNING: This product can expose you to lead which is known to the State of California to cause cancer and reproductive harm. For more information go to www.p65warnings.ca.gov

Product features

Application

This valve is typically used in air handling units on heating or cooling coils, and fan coil unit heating or cooling coils. Some other common applications include Unit Ventilators, VAV box re-heat coils and bypass loops. This valve is suitable for use in a hydronic system with variable flow.

Flow/Mounting details

Two-way valves should be installed with the disc upstream.

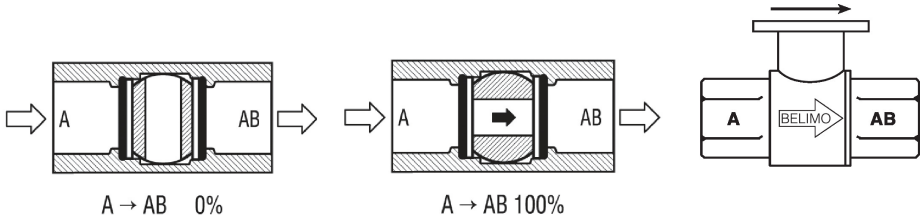

Dimensions

Type	DN	Weight
B232	32	1.6 lb [0.72 kg]

ARB, ARX

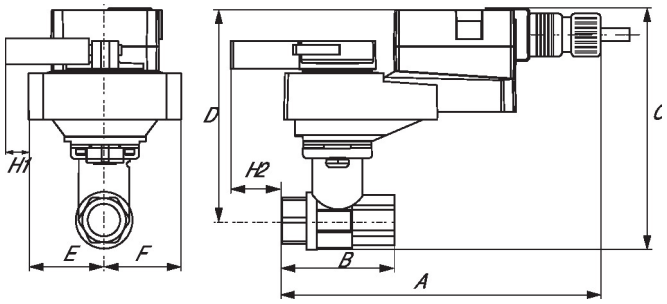

A	B	C	D	E	F	H1	H2
11.0" [280]	3.7" [95]	6.3" [159]	5.9" [150]	1.77" [44]	1.7" [44]	1.2" [30]	0.8" [20]

AFRB, AFRX

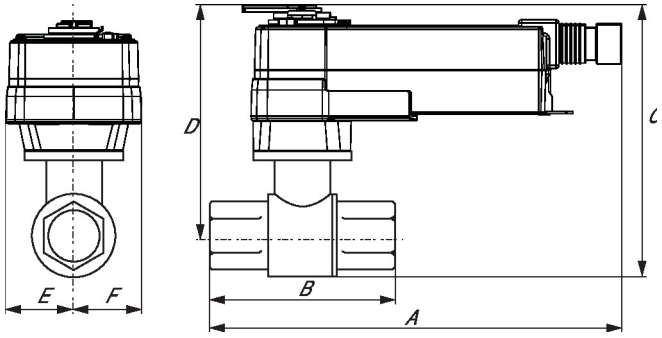

A	B	C	D	E	F
10.5" [267]	3.7" [95]	6.3" [159]	5.3" [135]	2.0" [51]	2.0" [51]

ARB N4, ARX N4, NRB N4, NRX N4

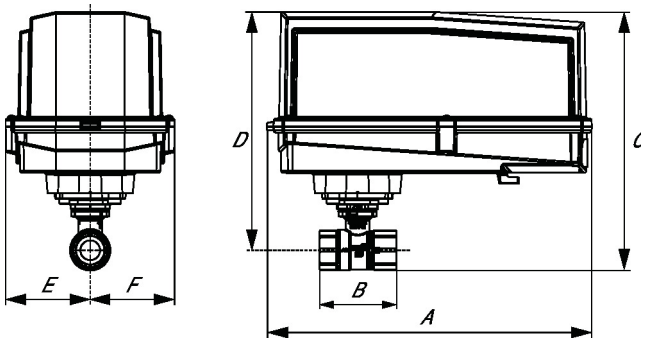

Dimensions

A	B	C	D	E	F
11.4" [289]	3.7" [95]	8.3" [211]	7.3" [185]	3.1" [80]	3.1" [80]

AFRB N4, AFRX N4

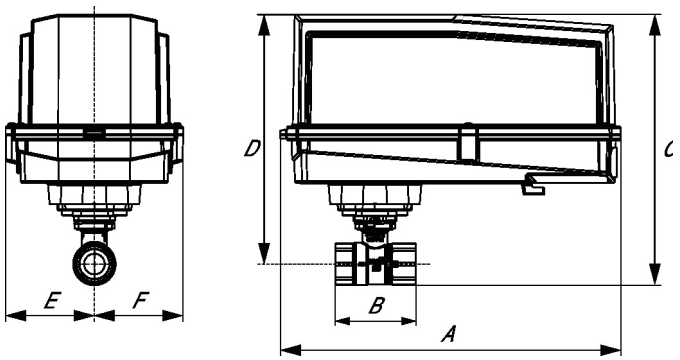

A	B	C	D	E	F
13.0" [330]	3.7" [95]	10.3" [262]	8.3" [212]	3.4" [86]	3.4" [86]

NRQB, NRQX

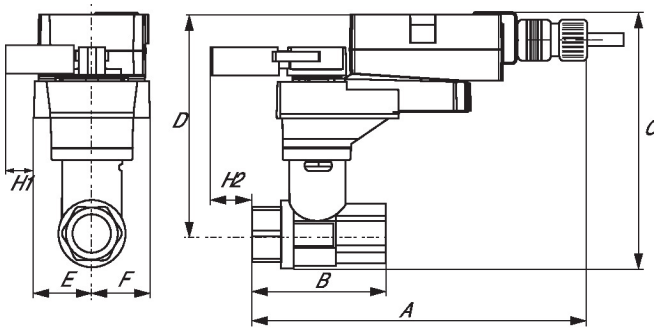

A	B	C	D	E	F
11.0" [280]	3.7" [95]	6.3" [159]	5.9" [150]	1.77" [44]	1.7" [44]

On/Off, Spring return, 24...240 V



5-year warranty

Please note: Due to a supplier issue, certain NEMA 4 actuator covers will be supplied in gray instead of orange until further notice. This change ensures uninterrupted shipping, and the same protective properties and product specifications.

Technical data

Electrical data	Nominal voltage	AC 24...240 V / DC 24...125 V
	Nominal voltage frequency	50/60 Hz
	Nominal voltage range	AC 19.2...264 V / DC 21.6...137.5 V
	Power consumption in operation	7 W
	Power consumption in rest position	3.5 W
	Electrical Connection	18 AWG appliance cable, 1 m, with 1/2" NPT conduit connector
	Overload Protection	electronic throughout 0...95° rotation
Functional data	Direction of motion motor	selectable by ccw/cw mounting
	Direction of motion fail-safe	reversible with cw/ccw mounting
	Manual override	5 mm hex crank (3/16" Allen), supplied
	Angle of rotation	90°
	Running Time (Motor)	75 s / 90°
	Running time fail-safe	<20 s
	Noise level, motor	45 dB(A)
	Noise level, fail-safe	62 dB(A)
	Position indication	Mechanical
Safety data	Power source UL	Class 2 Supply
	Degree of protection IEC/EN	IP66
	Degree of protection NEMA/UL	NEMA 4X
	Housing	UL Enclosure Type 4X
	Agency Listing	cULus acc. to UL60730-1A/-2-14, CAN/CSA E60730-1:02, CE acc. to 2014/30/EU and 2014/35/EU
	Quality Standard	ISO 9001
	Ambient humidity	Max. 100% RH
	Ambient temperature	-22...122°F [-30...50°C]
	Ambient temperature note	-40...50°C [104...122°F] for actuator with integrated heating
	Storage temperature	-40...176°F [-40...80°C]
	Servicing	maintenance-free
Weight	Weight	6.6 lb [3.0 kg]

Technical data

Materials	Housing material	Die cast aluminium and plastic casing

Footnotes †Rated Impulse Voltage 800V, Type of action 1.AA, Control Pollution Degree 3

Peripheral devices

Description	Type
Cable conduit connector 1/2"	TF-CC US
Wrench 0.32 in and 0.39 in [8 mm and 10 mm]	TOOL-06
Mounting bracket for AF..	ZG-100
Mounting bracket for AF / NF	ZG-101
Mounting bracket for AF / NF	ZG-118
Mounting kit for foot mount installation	ZG-AFB118
Weather shield 13x8x6" [330x203x152 mm] (LxWxH)	ZS-100
Weather shield 406x213x102 mm [16x8-3/8x4"] (LxWxH)	ZS-150
Explosion proof housing 16x10x6.435" [406x254x164 mm] (LxWxH), UL and CSA, Class I, Zone 1&2, Groups B, C, D, (NEMA 7), Class III, Hazardous (classified) Locations	ZS-260
Weather shield 17-1/4x8-3/4x5-1/2" [438x222x140 mm] (LxWxH), NEMA 4X, with mounting brackets	ZS-300

Accessories

Factory add-on option only

Description	Type
Heater, with adjustable thermostat	ACT_PACK_H
Heater, with adjustable thermostat	ACT_PACK_Y

Electrical installation

Wire colors:
1 = blue
2 = brown

AC 24...240 V / DC 24...125 V, on/off

