# Technical data sheet B307B

3-way Mixing/Diverting, Characterized Control Valve, Chrome Plated Brass Ball and Nickel Plated Brass Stem



Picture may differ from product

5-year warranty

## Type overview

| Type | DN |
|---|---|
| B307B | 1/2" [15] |

## Technical data

| | | |
|---|---|---|
| **Functional data** | Valve size [mm] | 0.5" [15] |
| | Fluid | chilled or hot water, up to 60% glycol |
| | Fluid Temp Range (water) | 0...250°F [-18...120°C] |
| | Body Pressure Rating | 600 psi |
| | Close-off pressure Δps | 200 psi |
| | Flow | A-port: as stated in chart B-port: 70% of A–AB Cv |
| | Flow characteristic | A-port equal percentage, B-port modified for constant common port flow |
| | Leakage rate | 0% for A–AB, <2.0% for B–AB |
| | Pipe connection | Internal thread<br>NPT (female) |
| | Servicing | maintenance-free |
| | Flow Pattern | 3-way Mixing/Diverting |
| | Controllable flow range | 75° |
| | Cv | 0.3 |
| **Materials** | Valve body | Nickel-plated brass body |
| | Stem | nickel-plated brass |
| | Stem seal | EPDM (lubricated) |
| | Seat | PTFE |
| | Characterized disc | TEFZEL® |
| | O-ring | EPDM (lubricated) |
| | Ball | chrome plated brass |
| **Suitable actuators** | Non Fail-Safe | TR<br>LRB(X) |
| | Spring | TFRB(X)<br>LF |

## Safety notes

- WARNING: This product can expose you to lead which is known to the State of California to cause cancer and reproductive harm. For more information go to www.p65warnings.ca.gov

## Product features

**Application**

This valve is typically used in air handling units on heating or cooling coils, and fan coil unit heating or cooling coils. Some other common applications include Unit Ventilators, VAV box re-heat coils and bypass loops. This valve is suitable for use in a hydronic system with variable or constant flow.

**Flow/Mounting details**

This valve is not suitable for use as a change over valve.

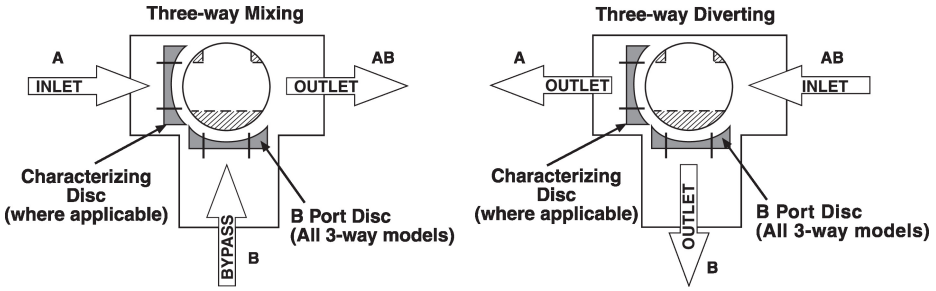


## Dimensions

| Type | DN | Weight |
|---|---|---|
| B307B | 1/2" [15] | 0.60 lb [0.27 kg] |

LRB, LRX

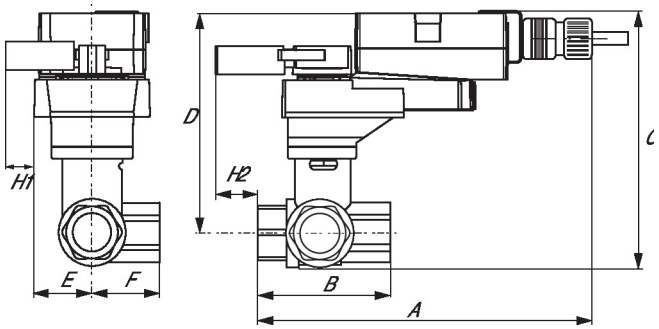


| A | B | C | D | E | F | H1 | H2 |
|---|---|---|---|---|---|---|---|
| 8.5" [216] | 2.4" [60] | 5.2" [132] | 4.6" [117] | 1.3" [33] | 1.3" [33] | 1.2" [30] | 1.1" [28] |

TR

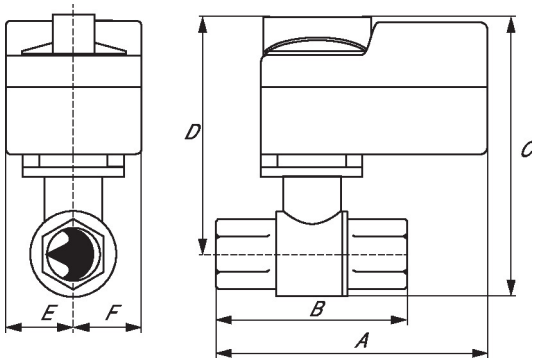


| A | B | C | D | E | F |
|---|---|---|---|---|---|
| 3.7" [95] | 2.4" [60] | 4.8" [122] | 4.2" [107] | 1.3" [33] | 1.2" [31] |

## Dimensions

TFRB, TFRX

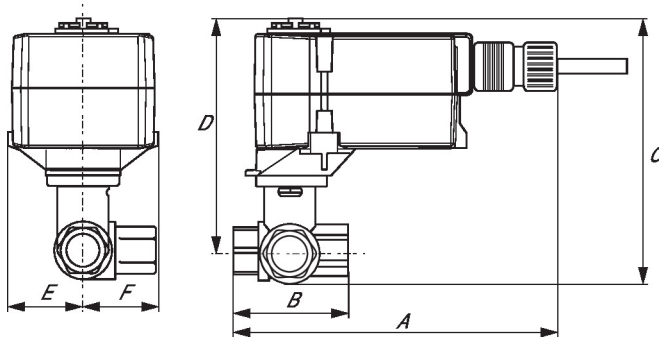


| A | B | C | D | E | F |
|---|---|---|---|---|---|
| 6.6" [167] | 2.4" [60] | 4.9" [124] | 4.3" [110] | 1.5" [39] | 1.2" [31] |

LF

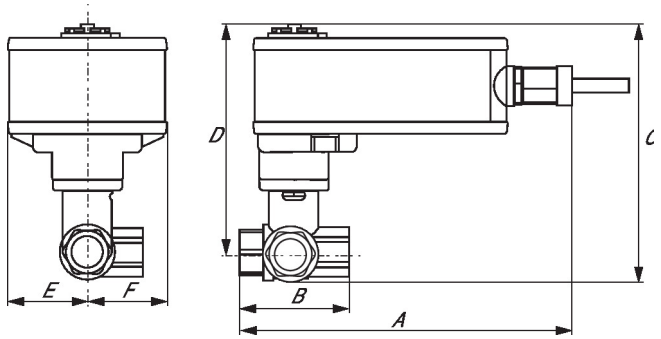


| A | B | C | D | E | F |
|---|---|---|---|---|---|
| 7.91" [200] | 2.4" [60] | 5.7" [146] | 5.1" [129] | 1.8" [46] | 1.9" [48] |