Technical data sheet B309B

3-way Mixing/Diverting, Characterized Control Valve, Chrome Plated Brass Ball and Nickel Plated Brass Stem



Picture may differ from product

5-year warranty

Type overview

Type	DN
B309B	1/2" [15]

Technical data

Functional data	Valve size [mm]	0.5" [15]
	Fluid	chilled or hot water, up to 60% glycol
	Fluid Temp Range (water)	0...250°F [-18...120°C]
	Body Pressure Rating	600 psi
	Close-off pressure Δps	200 psi
	Flow	A-port: as stated in chart B-port: 70% of A–AB Cv
	Flow characteristic	A-port equal percentage, B-port modified for constant common port flow
	Leakage rate	0% for A–AB, <2.0% for B–AB
	Pipe connection	Internal thread NPT (female)
	Servicing	maintenance-free
	Flow Pattern	3-way Mixing/Diverting
	Controllable flow range	75°
	Cv	0.8
Materials	Valve body	Nickel-plated brass body
	Stem	nickel-plated brass
	Stem seal	EPDM (lubricated)
	Seat	PTFE
	Characterized disc	TEFZEL®
	O-ring	EPDM (lubricated)
	Ball	chrome plated brass
Suitable actuators	Non Fail-Safe	TR LRB(X)
	Spring	TFRB(X) LF

Safety notes

- WARNING: This product can expose you to lead which is known to the State of California to cause cancer and reproductive harm. For more information go to www.p65warnings.ca.gov

Product features

Application

This valve is typically used in air handling units on heating or cooling coils, and fan coil unit heating or cooling coils. Some other common applications include Unit Ventilators, VAV box re-heat coils and bypass loops. This valve is suitable for use in a hydronic system with variable or constant flow.

Flow/Mounting details

This valve is not suitable for use as a change over valve.

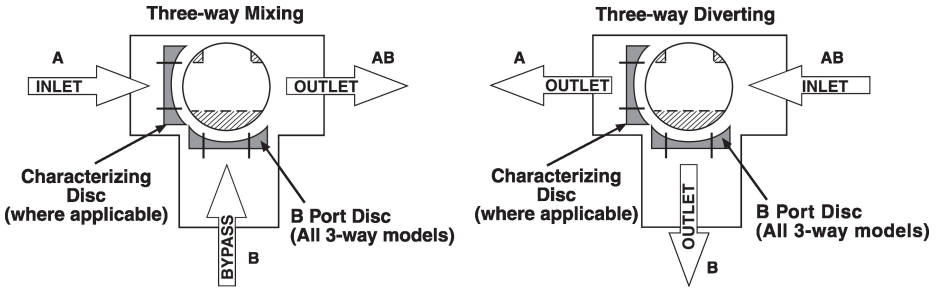

Dimensions

Type	DN	Weight
B309B	1/2" [15]	0.59 lb [0.27 kg]

LRB, LRX

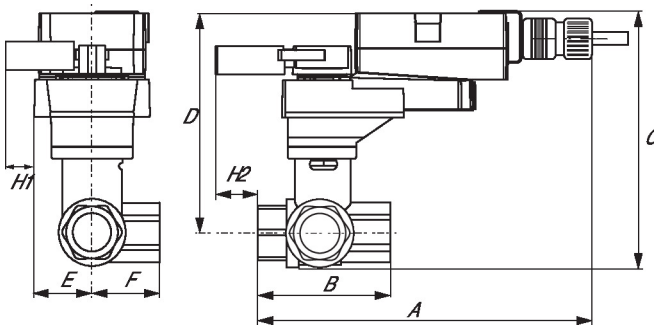

A	B	C	D	E	F	H1	H2
8.5" [216]	2.4" [60]	5.2" [132]	4.6" [117]	1.3" [33]	1.3" [33]	1.2" [30]	1.1" [28]

TR

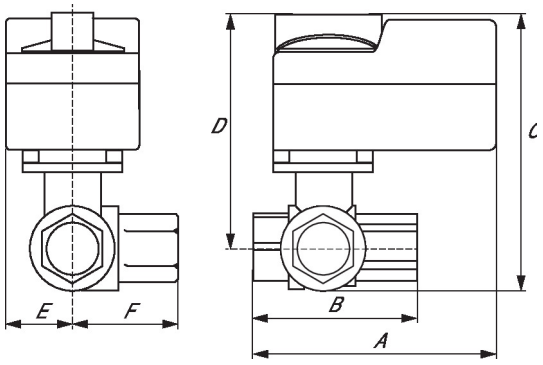

A	B	C	D	E	F
3.7" [95]	2.4" [60]	4.8" [122]	4.2" [107]	1.3" [33]	1.2" [31]

Dimensions

TFRB, TFRX

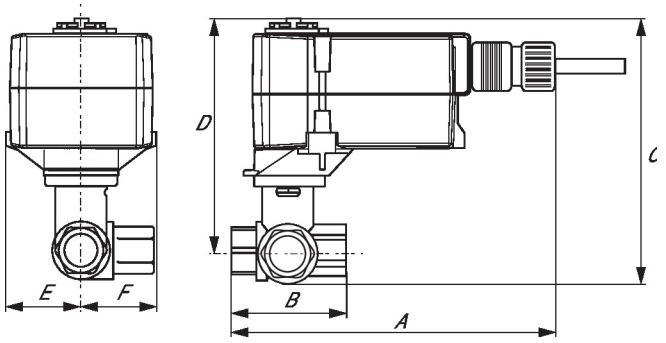

A	B	C	D	E	F
6.6" [167]	2.4" [60]	4.9" [124]	4.3" [110]	1.5" [39]	1.2" [31]

LF

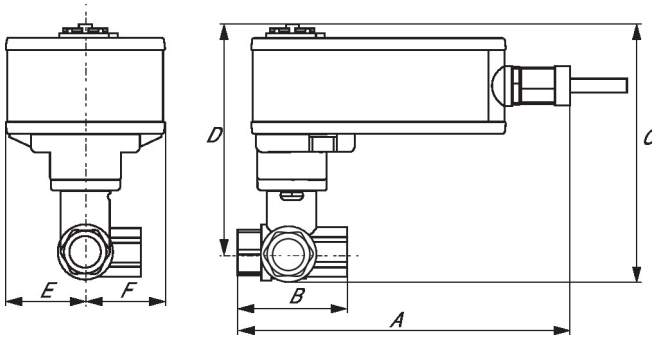

A	B	C	D	E	F
7.91" [200]	2.4" [60]	5.7" [146]	5.1" [129]	1.8" [46]	1.9" [48]

BELIMO

Technical data sheet LF120 US

On/Off, Spring return, 100...240 V

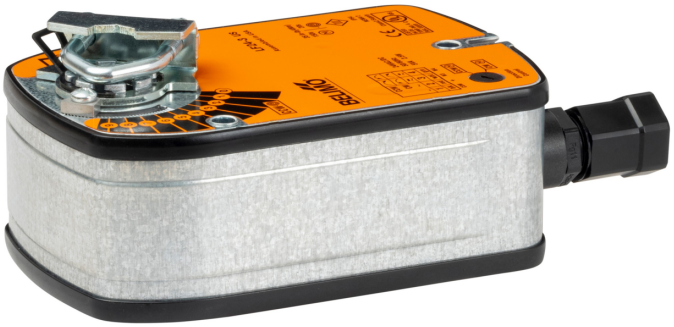

Picture may differ from product

5-year warranty

Technical data

Electrical data	Nominal voltage	AC 100...240 V
	Nominal voltage frequency	50/60 Hz
	Nominal voltage range	AC 96...132 V
	Power consumption in operation	5.5 W
	Power consumption in rest position	3.5 W
	Transformer sizing	7.5 VA
	Electrical Connection	18 AWG appliance cable, 1 m, with 1/2" NPT conduit connector
	Overload Protection	electronic throughout 0...95° rotation
Functional data	Direction of motion motor	selectable with switch 0/1
	Direction of motion fail-safe	reversible with cw/ccw mounting
	Angle of rotation	90°
	Running Time (Motor)	75 s / 90°
	Running time fail-safe	<25 s @ -20...50°C, <60 s @ -30°C
	Sound power level, motor	50 dB(A)
	Sound power level, fail-safe	62 dB(A)
	Position indication	Mechanical
Safety data	Degree of protection IEC/EN	IP54
	Degree of protection NEMA/UL	NEMA 2
	Housing	UL Enclosure Type 2
	Agency Listing	cULus acc. To UL 873 and CAN/CSA C22.2 No. 24-93
	Quality Standard	ISO 9001
	UL 2043 Compliant	Suitable for use in air plenums per Section 300.22(C) of the NEC and Section 602 of the IMC
	Ambient humidity	Max. 95% RH, non-condensing
	Ambient temperature	-22...122°F [-30...50°C]
	Storage temperature	-40...176°F [-40...80°C]
	Servicing	maintenance-free
Weight	Weight	[]
Materials	Housing material	galvanized steel

Footnotes †Rated Impulse Voltage 800V, Type of action 1.AA, Control Pollution Degree 3

Electrical installation

Wire colors:
1 = blue
2 = brown

AC 230 V, on/off

