3-way Mixing/Diverting, Characterized Control Valve, Stainless Steel Ball and Stem



Picture may differ from product

5-year warranty

Type overview

Type	DN
B312	1/2" [15]

Technical data

Functional data	Valve size [mm]	0.5" [15]
	Fluid	chilled or hot water, up to 60% glycol
	Fluid Temp Range (water)	0...250°F [-18...120°C]
	Body Pressure Rating	600 psi
	Close-off pressure Δps	200 psi
	Flow	A-port: as stated in chart B-port: 70% of A – AB Cv
	Flow characteristic	A-port equal percentage, B-port modified for constant common port flow
	Leakage rate	0% for A – AB, <2.0% for B – AB
	Pipe connection	Internal thread NPT (female)
	Servicing	maintenance-free
	Flow Pattern	3-way Mixing/Diverting
	Controllable flow range	75°
	Cv	3
Materials	Valve body	Nickel-plated brass body
	Stem	stainless steel
	Stem seal	EPDM (lubricated)
	Seat	PTFE
	Characterized disc	TEFZEL®
	O-ring	EPDM (lubricated)
	Ball	stainless steel
Suitable actuators	Non Fail-Safe	TR LRB(X) LRQB(X) NRB(X) N4
	Spring	TFRB(X) LF

Safety notes

- WARNING: This product can expose you to lead which is known to the State of California to cause cancer and reproductive harm. For more information go to www.p65warnings.ca.gov

Product features

Application

This valve is typically used in air handling units on heating or cooling coils, and fan coil unit heating or cooling coils. Some other common applications include Unit Ventilators, VAV box re-heat coils and bypass loops. This valve is suitable for use in a hydronic system with variable or constant flow.

Flow/Mounting details

This valve is not suitable for use as a change over valve.

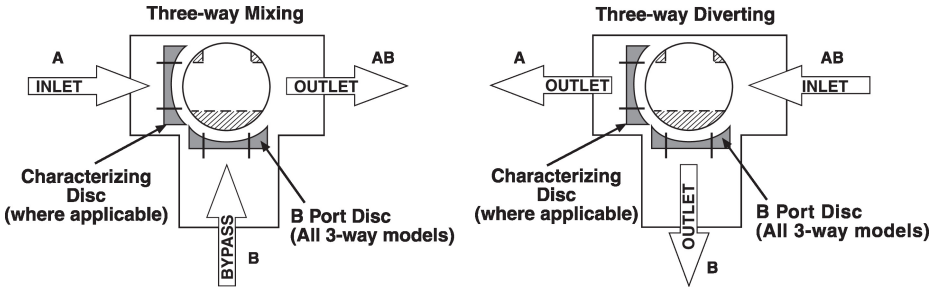

Dimensions

Type	DN	Weight
B312	1/2" [15]	0.72 lb [0.33 kg]

LRB, LRX

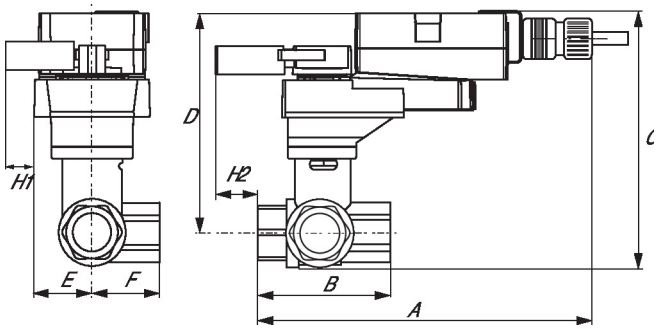

A	B	C	D	E	F	H1	H2
8.5" [216]	2.4" [60]	5.2" [132]	5.0" [127]	1.3" [33]	1.3" [33]	1.2" [30]	1.1" [28]

LRQB, LRQX

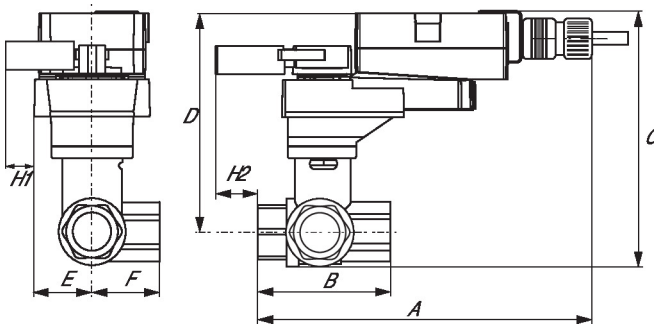

A	B	C	D	E	F	H1	H2
8.9" [226]	2.4" [60]	5.7" [146]	5.2" [131]	1.6" [40]	1.6" [40]	1.2" [30]	1.3" [33]

TR

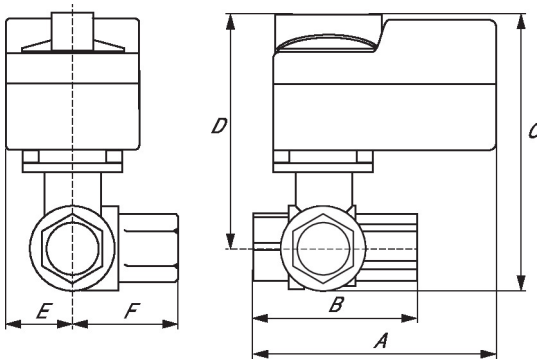

Dimensions

A	B	C	D	E	F
3.7" [95]	2.4" [60]	4.8" [122]	4.2" [107]	1.3" [33]	1.2" [31]

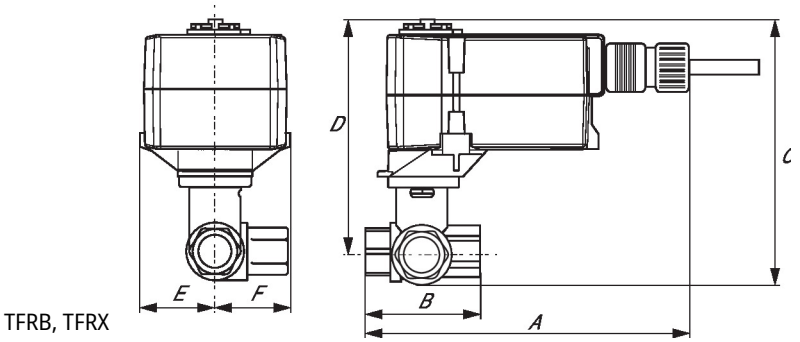

TFRB, TFRX

A	B	C	D	E	F
6.6" [167]	2.4" [60]	4.9" [124]	4.3" [110]	1.5" [39]	1.5" [39]

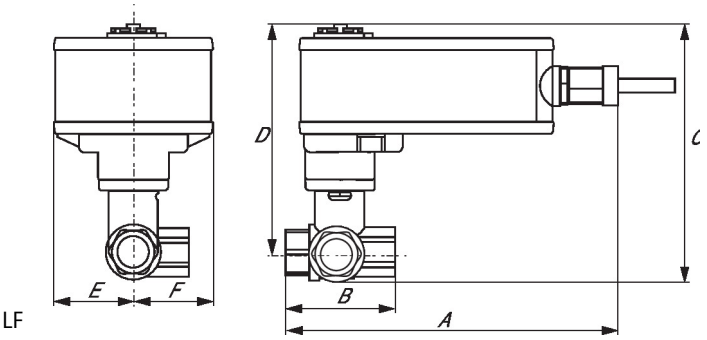

LF

A	B	C	D	E	F
7.91" [200]	2.4" [60]	5.7" [146]	5.1" [129]	1.8" [46]	1.8" [46]

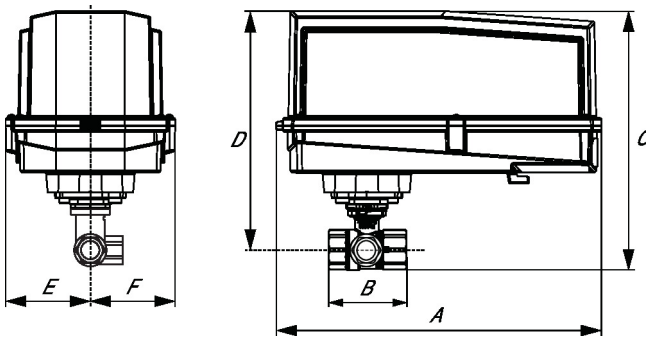

ARB N4, ARX N4

A	B	C	D	E	F
11.4" [289]	2.4" [60]	7.2" [184]	6.7" [169]	3.1" [80]	3.1" [80]

On/Off, Floating point, Non fail-safe, 24 V



5-year warranty

Technical data

Electrical data	Nominal voltage	AC/DC 24 V
	Nominal voltage frequency	50/60 Hz
	Nominal voltage range	AC 19.2...28.8 V / DC 21.6...28.8 V
	Power consumption in operation	2 W
	Power consumption in rest position	0.2 W
	Transformer sizing	4 VA
	Electrical Connection	Screw terminal (for 26...14 AWG wire), 1/2" NPT conduit connector
	Overload Protection	electronic throughout 0...95° rotation
Functional data	Direction of motion motor	selectable with switch 0/1
	Manual override	external push button
	Angle of rotation	Max. 90°
	Angle of rotation note	adjustable with mechanical stop
	Running Time (Motor)	90 s / 90°
	Noise level, motor	45 dB(A)
	Position indication	pointer
Safety data	Power source UL	Class 2 Supply
	Degree of protection IEC/EN	IP66/67
	Degree of protection NEMA/UL	NEMA 4X
	Housing	UL Enclosure Type 4X
	Agency Listing	cULus acc. to UL60730-1A/-2-14, CAN/CSA E60730-1:02, CE acc. to 2014/30/EU and 2014/35/EU
	Quality Standard	ISO 9001
	Ambient humidity	Max. 100% RH
	Ambient temperature	-22...122°F [-30...50°C]
	Ambient temperature note	-40...50°C [104...122°F] for actuator with integrated heating
	Storage temperature	-40...176°F [-40...80°C]
	Servicing	maintenance-free
Weight	Weight	1.7 lb [0.79 kg]

Technical data

Materials	Housing material	Die cast aluminium and plastic casing

Footnotes †Rated Impulse Voltage 800V, Type of action 1.AA, Control Pollution Degree 3

Accessories

Electrical accessories	**Description**	**Type**
	Auxiliary switch 1x SPDT add-on	S1A
	Auxiliary switch 2x SPDT add-on	S2A
	Feedback potentiometer 140 Ω add-on, grey	P140A GR
	Feedback potentiometer 1 kΩ add-on, grey	P1000A GR
	Feedback potentiometer 10 kΩ add-on, grey	P10000A GR
	Feedback potentiometer 2.8 kΩ add-on, grey	P2800A GR
	Feedback potentiometer 500 Ω add-on, grey	P500A GR
	Feedback potentiometer 5 kΩ add-on, grey	P5000A GR
Factory add-on option only	**Description**	**Type**
	Heater, with adjustable thermostat	ACT_PACK_H

Electrical installation

INSTALLATION NOTES

1 Provide overload protection and disconnect as required.

2 Actuators may be connected in parallel. Power consumption and input impedance must be observed.

3 Actuators may also be powered by DC 24 V.

6 Actuators Hot wire must be connected to the control board common. Only connect common to neg. (-) leg of control circuits. Terminal models (-T) have no-feedback.

16 Actuators are provided with a numbered screw terminal strip instead of a cable.

Meets cULus requirements without the need of an electrical ground connection.

Warning! Live electrical components!

During installation, testing, servicing and troubleshooting of this product, it may be necessary to work with live electrical components. Have a qualified licensed electrician or other individual who has been properly trained in handling live electrical components perform these tasks. Failure to follow all electrical safety precautions when exposed to live electrical components could result in death or serious injury.

Wiring diagrams

On/Off

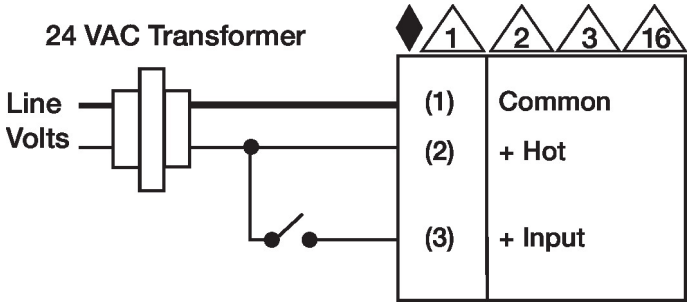

Floating Point

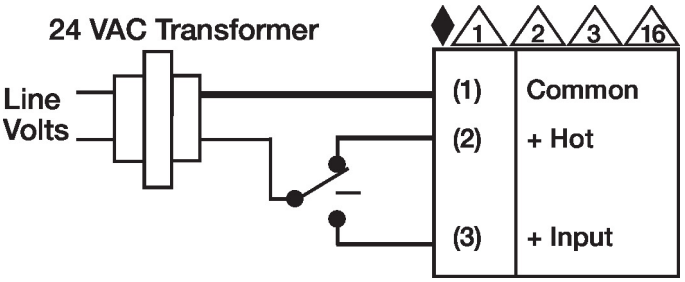

Electrical installation

Wiring diagrams

Floating Point - Triac Source

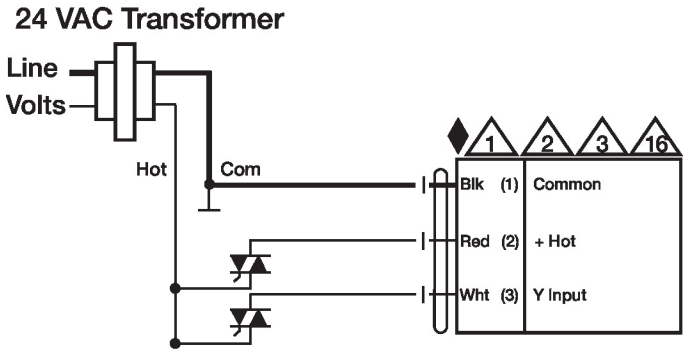

Floating Point - Triac Sink

