3-way Mixing/Diverting, Characterized Control Valve, Stainless Steel Ball and Stem



Picture may differ from product

5-year warranty

Type overview

Type	DN
B320	3/4" [20]

Technical data

Functional data	Valve size [mm]	0.75" [20]
	Fluid	chilled or hot water, up to 60% glycol
	Fluid Temp Range (water)	0...250°F [-18...120°C]
	Body Pressure Rating	600 psi
	Close-off pressure Δps	200 psi
	Flow	A-port: as stated in chart B-port: 70% of A – AB Cv
	Flow characteristic	A-port equal percentage, B-port modified for constant common port flow
	Leakage rate	0% for A – AB, <2.0% for B – AB
	Pipe connection	Internal thread NPT (female)
	Servicing	maintenance-free
	Flow Pattern	3-way Mixing/Diverting
	Controllable flow range	75°
	Cv	14
Materials	Valve body	Nickel-plated brass body
	Stem	stainless steel
	Stem seal	EPDM (lubricated)
	Seat	PTFE
	Characterized disc	TEFZEL®
	O-ring	EPDM (lubricated)
	Ball	stainless steel
Suitable actuators	Non Fail-Safe	LRB(X) LRQB(X) NRB(X) N4
	Spring	LF

Safety notes

- WARNING: This product can expose you to lead which is known to the State of California to cause cancer and reproductive harm. For more information go to www.p65warnings.ca.gov

Product features

Application

This valve is typically used in air handling units on heating or cooling coils, and fan coil unit heating or cooling coils. Some other common applications include Unit Ventilators, VAV box re-heat coils and bypass loops. This valve is suitable for use in a hydronic system with variable or constant flow.

Flow/Mounting details

This valve is not suitable for use as a change over valve.

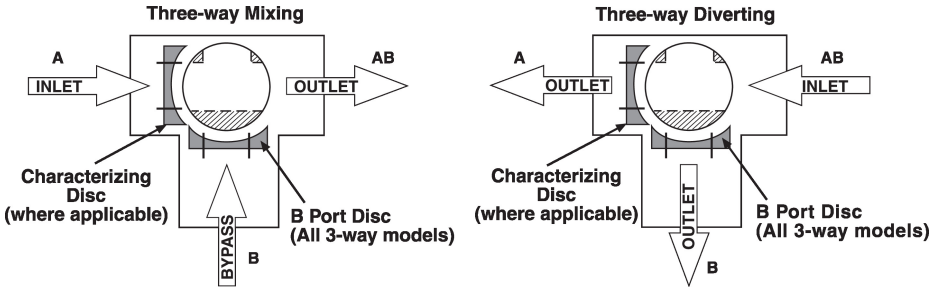

Dimensions

Type	DN	Weight
B320	3/4" [20]	0.99 lb [0.45 kg]

LRB, LRX

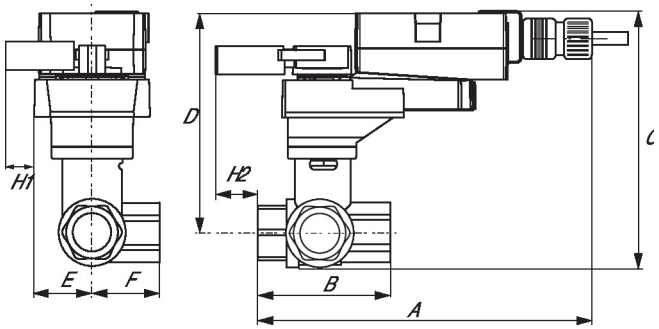

A	B	C	D	E	F	H1	H2
8.5" [216]	2.7" [69]	5.8" [147]	5.1" [129]	1.3" [33]	1.5" [39]	1.2" [30]	1" [25]

ARB N4, ARX N4

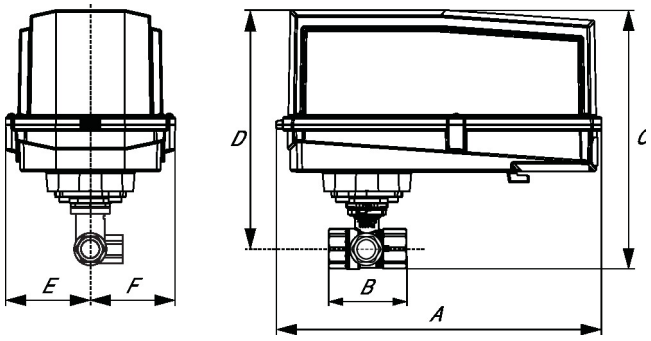

A	B	C	D	E	F
11.4" [289]	2.8" [70]	7.7" [196]	7.0" [179]	3.1" [80]	3.1" [80]

LRQB, LRQX

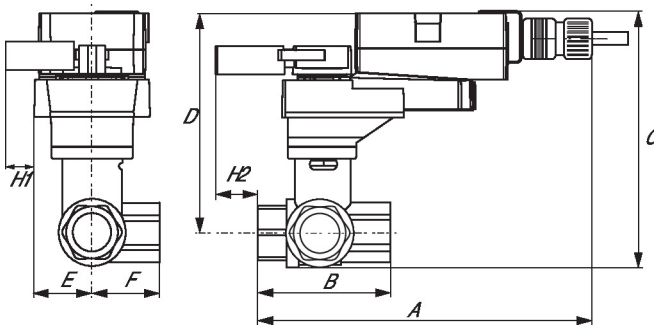

Dimensions

A	B	C	D	E	F	H1	H2
8.9" [226]	2.7" [69]	6.3" [159]	5.6" [142]	1.6" [40]	1.6" [40]	1.2" [30]	1.3" [33]

TFRB, TFRX

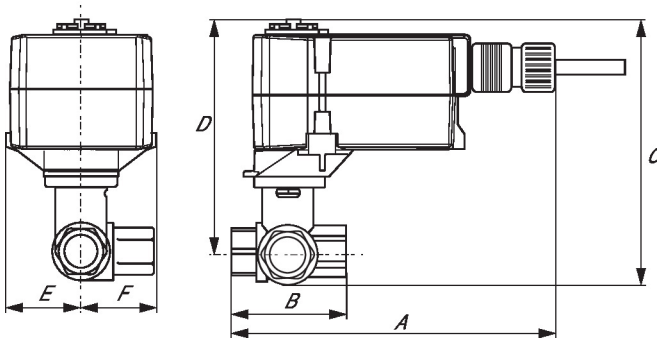

A	B	C	D	E	F
6.6" [167]	2.7" [69]	4.9" [124]	4.3" [110]	1.5" [39]	1.5" [39]

On/Off, Spring return, 24 V

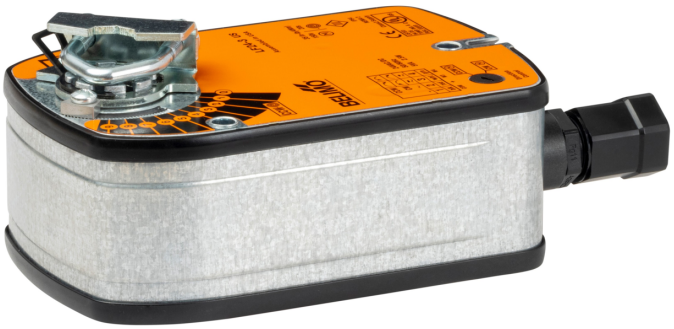

5-year warranty

Technical data

Electrical data	Nominal voltage	AC/DC 24 V
	Nominal voltage frequency	50/60 Hz
	Nominal voltage range	AC 19.2...28.8 V / DC 21.6...28.8 V
	Power consumption in operation	5 W
	Power consumption in rest position	2.5 W
	Transformer sizing	7 VA
	Electrical Connection	18 GA appliance cable, 3 ft [1 m], with 1/2" NPT conduit connector
	Overload Protection	electronic throughout 0...95° rotation
Functional data	Direction of motion motor	selectable with switch 0/1
	Direction of motion fail-safe	reversible with cw/ccw mounting
	Angle of rotation	90°
	Running Time (Motor)	75 s / 90°
	Running time fail-safe	<25 s @ -4...122°F [-20...50°C], <60 s @ -22°F [-30°C]
	Noise level, motor	50 dB(A)
	Noise level, fail-safe	62 dB(A)
	Position indication	Mechanical
Safety data	Power source UL	Class 2 Supply
	Degree of protection IEC/EN	IP54
	Degree of protection NEMA/UL	NEMA 2
	Enclosure	UL Enclosure Type 2
	Agency Listing	cULus acc. To UL 873 and CAN/CSA C22.2 No. 24-93
	Quality Standard	ISO 9001
	UL 2043 Compliant	Suitable for use in air plenums per Section 300.22(C) of the NEC and Section 602 of the IMC
	Ambient humidity	Max. 95% RH, non-condensing
	Ambient temperature	-22...122°F [-30...50°C]
	Storage temperature	-40...176°F [-40...80°C]
	Servicing	maintenance-free
Weight	Weight	[]

Technical data

Materials	Housing material	galvanized steel

Footnotes †Rated Impulse Voltage 800V, Type of action 1.AA, Control Pollution Degree 3

Electrical installation

INSTALLATION NOTES

A Actuators with appliance cables are numbered.

1 Provide overload protection and disconnect as required.

3 Actuators may also be powered by DC 24 V.

11 Actuators may be connected in parallel if not mechanically linked. Power consumption and input impedance must be observed.

Meets cULus requirements without the need of an electrical ground connection.

Warning! Live electrical components!
During installation, testing, servicing and troubleshooting of this product, it may be necessary to work with live electrical components. Have a qualified licensed electrician or other individual who has been properly trained in handling live electrical components perform these tasks. Failure to follow all electrical safety precautions when exposed to live electrical components could result in death or serious injury.

Wiring diagrams
On/Off

