3-way Mixing/Diverting, Characterized Control Valve, Stainless Steel Ball and Stem



Picture may differ from product

5-year warranty

Type overview

Type	DN
B321	3/4" [20]

Technical data

Functional data	Valve size [mm]	0.75" [20]
	Fluid	chilled or hot water, up to 60% glycol
	Fluid Temp Range (water)	0...250°F [-18...120°C]
	Body Pressure Rating	600 psi
	Close-off pressure Δps	200 psi
	Flow	A-port: as stated in chart B-port: 70% of A – AB Cv
	Flow characteristic	A-port equal percentage, B-port modified for constant common port flow
	Leakage rate	0% for A – AB, <2.0% for B – AB
	Pipe connection	Internal thread NPT (female)
	Servicing	maintenance-free
	Flow Pattern	3-way Mixing/Diverting
	Controllable flow range	75°
	Cv	24
Materials	Valve body	Nickel-plated brass body
	Stem	stainless steel
	Stem seal	EPDM (lubricated)
	Seat	PTFE
	Characterized disc	TEFZEL®
	O-ring	EPDM (lubricated)
	Ball	stainless steel
Suitable actuators	Non Fail-Safe	LRB(X) LRQB(X) NRB(X) N4
	Spring	LF

Safety notes

- WARNING: This product can expose you to lead which is known to the State of California to cause cancer and reproductive harm. For more information go to www.p65warnings.ca.gov

Product features

Application

This valve is typically used in air handling units on heating or cooling coils, and fan coil unit heating or cooling coils. Some other common applications include Unit Ventilators, VAV box re-heat coils and bypass loops. This valve is suitable for use in a hydronic system with variable or constant flow.

Flow/Mounting details

This valve is not suitable for use as a change over valve.

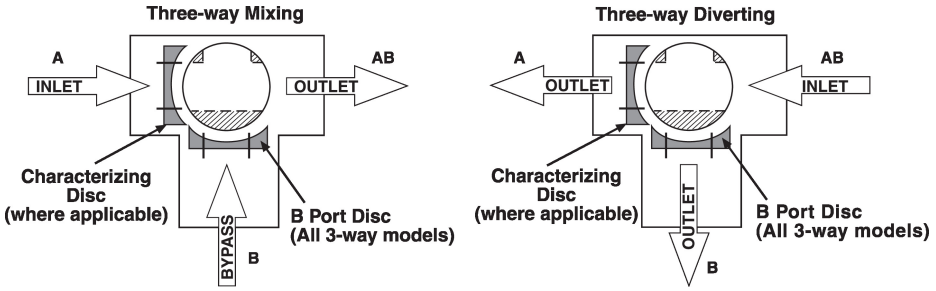

Dimensions

Type	DN	Weight
B321	3/4" [20]	0.98 lb [0.45 kg]

LRB, LRX

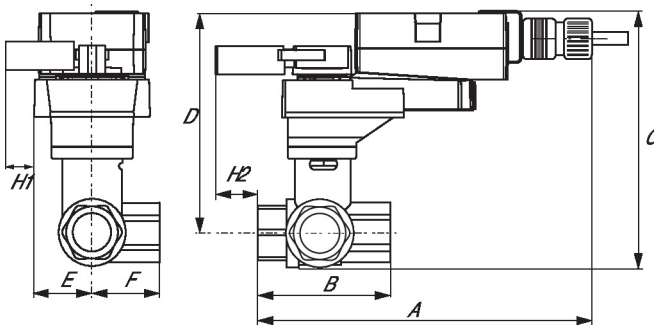

A	B	C	D	E	F	H1	H2
8.5" [216]	2.7" [69]	5.8" [147]	5.1" [129]	1.3" [33]	1.5" [39]	1.2" [30]	1" [25]

ARB N4, ARX N4

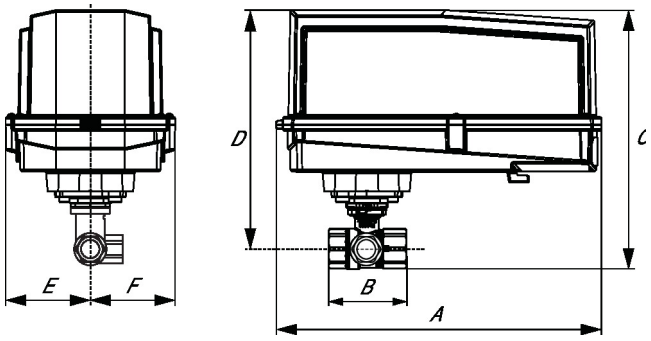

A	B	C	D	E	F
11.4" [289]	2.8" [70]	7.7" [196]	7.0" [179]	3.1" [80]	3.1" [80]

LRQB, LRQX

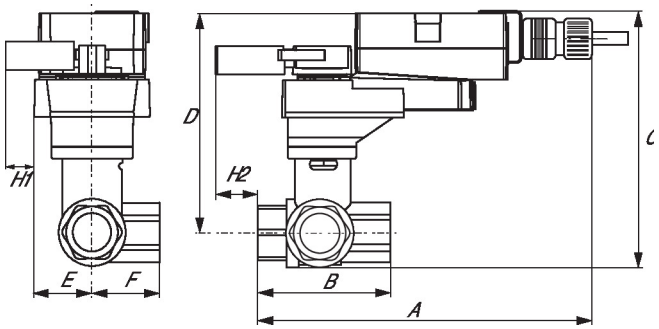

Dimensions

A	B	C	D	E	F	H1	H2
8.9" [226]	2.7" [69]	6.3" [159]	5.6" [142]	1.6" [40]	1.6" [40]	1.2" [30]	1.3" [33]

TFRB, TFRX

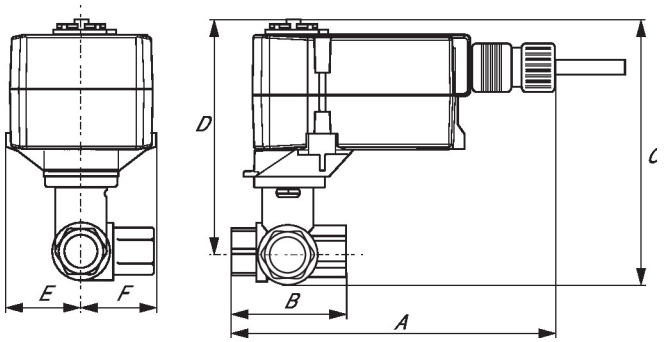

A	B	C	D	E	F
11.4" [289]	4.9" [125]	9.8" [249]	4.3" [110]	3.1" [80]	3.1" [80]

Modulating, Non fail-safe, 24 V



5-year warranty

Technical data

Electrical data	Nominal voltage	AC/DC 24 V
	Nominal voltage frequency	50/60 Hz
	Nominal voltage range	AC 19.2...28.8 V / DC 21.6...28.8 V
	Power consumption in operation	1.5 W
	Power consumption in rest position	0.2 W
	Transformer sizing	3 VA
	Electrical Connection	Screw terminal (for 26...14 AWG wire)
	Overload Protection	electronic thoughout 0...90° rotation
	Electrical Protection	actuators are double insulated
Functional data	Operating range Y	2...10 V
	Operating range Y note	4...20 mA w/ ZG-R01 (500 Ω, 1/4 W resistor)
	Input impedance	100 kΩ for 2...10 V (0.1 mA), 500 Ω for 4...20 mA
	Position feedback U	2...10 V
	Position feedback U note	Max. 1 mA
	Direction of motion motor	selectable with switch 0/1
	Manual override	external push button
	Angle of rotation	90°
	Angle of rotation note	adjustable with mechanical stop
	Running Time (Motor)	90 s / 90°
	Noise level, motor	35 dB(A)
	Position indication	Mechanical, pluggable
Safety data	Power source UL	Class 2 Supply
	Degree of protection NEMA/UL	NEMA 2
	Housing	UL Enclosure Type 2
	Agency Listing	cULus acc. to UL60730-1A/-2-14, CAN/CSA E60730-1:02, CE acc. to 2014/30/EU
	Quality Standard	ISO 9001
	UL 2043 Compliant	Suitable for use in air plenums per Section 300.22(C) of the NEC and Section 602 of the IMC
	Ambient humidity	Max. 95% RH, non-condensing

Technical data

Safety data	Ambient temperature	-22...122°F [-30...50°C]
	Storage temperature	-40...176°F [-40...80°C]
	Servicing	maintenance-free
Weight	Weight	0.91 lb [0.41 kg]
Materials	Housing material	Galvanized steel and plastic housing

Footnotes †Rated Impulse Voltage 800V, Type of Action 1, Control Pollution Degree 2.

Accessories

Electrical accessories

Description	Type
Auxiliary switch 1x SPDT add-on	S1A
Auxiliary switch 2x SPDT add-on	S2A
Feedback potentiometer 140 Ω add-on, grey	P140A GR
Feedback potentiometer 1 kΩ add-on, grey	P1000A GR
Feedback potentiometer 10 kΩ add-on, grey	P10000A GR
Feedback potentiometer 2.8 kΩ add-on, grey	P2800A GR
Feedback potentiometer 500 Ω add-on, grey	P500A GR
Feedback potentiometer 5 kΩ add-on, grey	P5000A GR

Electrical installation

INSTALLATION NOTES

1 Provide overload protection and disconnect as required.

2 Actuators may be connected in parallel. Power consumption and input impedance must be observed.

3 Actuators may also be powered by DC 24 V.

5 Only connect common to negative (-) leg of control circuits.

7 A 500 Ω resistor (ZG-R01) converts the 4...20 mA control signal to 2...10 V.

16 Actuators are provided with a numbered screw terminal strip instead of a cable.

Meets cULus requirements without the need of an electrical ground connection.

Warning! Live electrical components!

During installation, testing, servicing and troubleshooting of this product, it may be necessary to work with live electrical components. Have a qualified licensed electrician or other individual who has been properly trained in handling live electrical components perform these tasks. Failure to follow all electrical safety precautions when exposed to live electrical components could result in death or serious injury.

Wiring diagrams

2...10 V / 4...20 mA Control

