3-way Mixing/Diverting, Characterized Control Valve, Stainless Steel Ball and Stem



Picture may differ from product

5-year warranty

Type overview

Type	DN
B352	2" [50]

Technical data

Functional data	Valve size [mm]	2" [50]
	Fluid	chilled or hot water, up to 60% glycol
	Fluid Temp Range (water)	0...250°F [-18...120°C]
	Body Pressure Rating	400 psi
	Close-off pressure Δps	200 psi
	Flow	A-port: as stated in chart B-port: 70% of A–AB Cv
	Flow characteristic	A-port equal percentage, B-port modified for constant common port flow
	Leakage rate	0% for A–AB, <2.0% for B–AB
	Pipe connection	Internal thread NPT (female)
	Servicing	maintenance-free
	Flow Pattern	3-way Mixing/Diverting
	Controllable flow range	75°
	Cv	83
Materials	Valve body	Nickel-plated brass body
	Stem	stainless steel
	Stem seal	EPDM (lubricated)
	Seat	PTFE
	Characterized disc	Stainless steel
	O-ring	EPDM (lubricated)
	Ball	stainless steel
Suitable actuators	Non Fail-Safe	ARB(X) ARQB(X) ARB(X) N4
	Spring	AFRB(X)

Safety notes

- WARNING: This product can expose you to lead which is known to the State of California to cause cancer and reproductive harm. For more information go to www.p65warnings.ca.gov

Product features

Application

This valve is typically used in air handling units on heating or cooling coils, and fan coil unit heating or cooling coils. Some other common applications include Unit Ventilators, VAV box re-heat coils and bypass loops. This valve is suitable for use in a hydronic system with variable or constant flow.

Flow/Mounting details

This valve is not suitable for use as a change over valve.

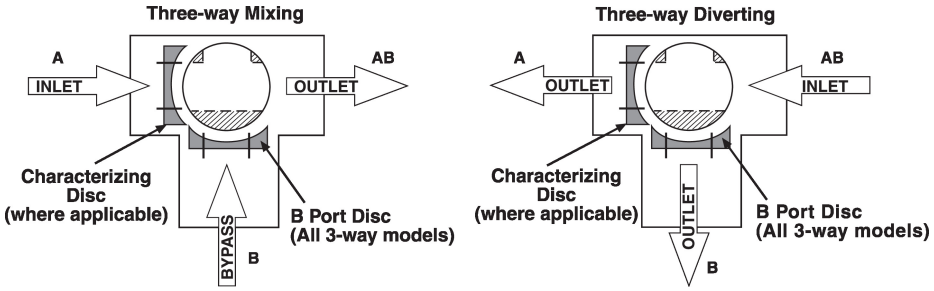

Dimensions

Type	DN	Weight
B352	2" [50]	5.5 lb [2.5 kg]

ARB, ARX

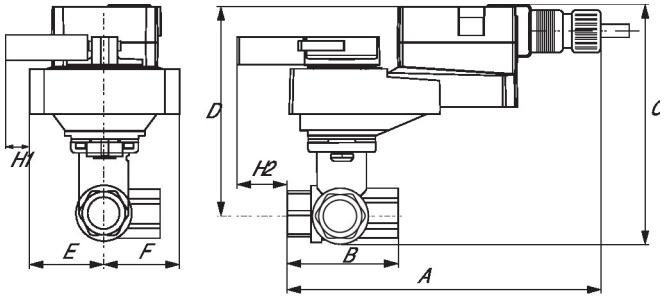

A	B	C	D	E	F	H1	H2
10.5" [267]	4.9" [125]	7.7" [196]	6.0" [153]	1.77" [44]	2.6" [66]	0.8" [20]	1.2" [30]

ARB N4, ARX N4

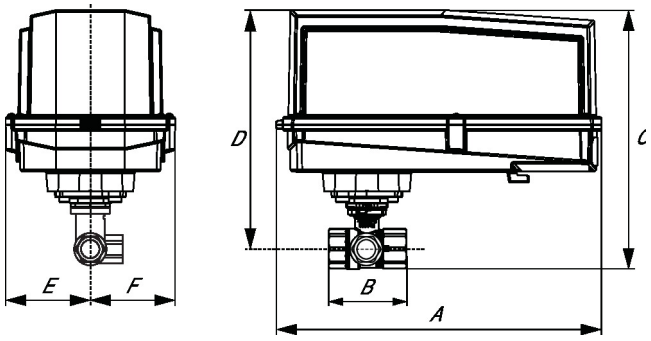

A	B	C	D	E	F
11.4" [289]	4.9" [125]	9.8" [249]	8.0" [203]	3.1" [80]	3.1" [80]

ARQB, ARQX

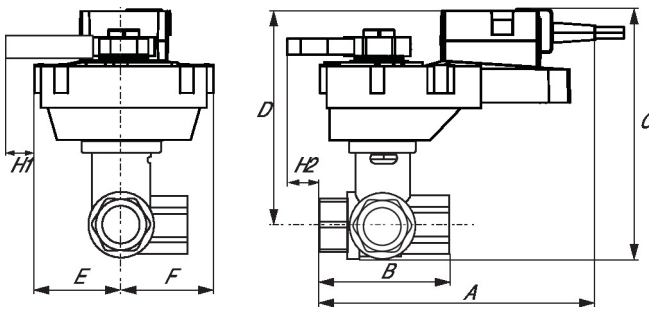

A	B	C	D	E	F	H1	H2
9.9" [251]	4.9" [125]	8.3" [211]	6.6" [168]	2.3" [58]	2.6" [66]	0.8" [20]	0.6" [15]

Dimensions

AFRB, AFRX

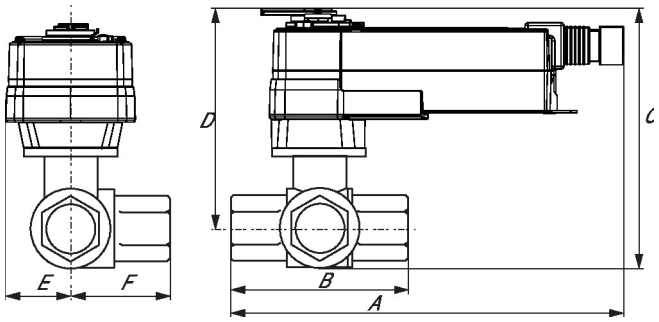

A	B	C	D	E	F
11.3" [286]	4.9" [125]	8.3" [211]	6.6" [168]	2.6" [66]	2.6" [66]

AFRB N4, AFRX N4

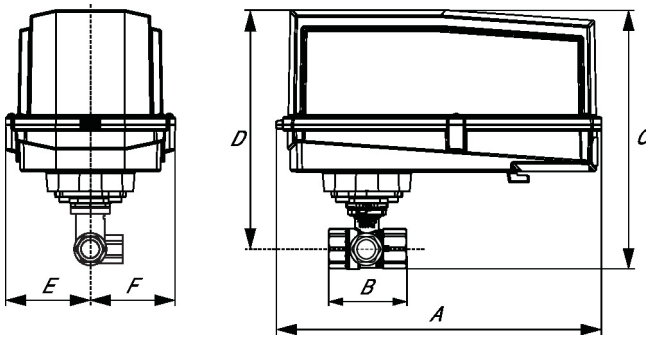

A	B	C	D	E	F
13.0" [330]	4.9" [125]	11.8" [300]	9.9" [251]	3.7" [95]	3.7" [95]