BELIMO

Technical data sheet B6250S-110-250

2-way, Characterized Control Valve, Stainless Steel Ball and Stem



Picture may differ from product

5-year warranty

Type overview

Type	DN
B6250S-110-250	2 1/2" [65]

Technical data

Functional data	Valve size [mm]	2.5" [65]
	Fluid	chilled or hot water, up to 60% glycol
	Fluid Temp Range (water)	0...250°F [-18...120°C]
	Body Pressure Rating	ANSI Class 250, raised-face
	Close-off pressure Δps	310 psi
	Flow characteristic	equal percentage
	Leakage rate	0% for A–AB
	Pipe connection	Flange for use with ASME/ANSI class 250
	Servicing	maintenance-free
	Maximum differential pressure (water)	50 psi [345 kPa]
	Flow Pattern	2-way
	Controllable flow range	75°
	Cv	110
Materials	Valve body	Cast iron - GG 25
	Stem	stainless steel
	Stem seal	EPDM (lubricated)
	Seat	PTFE
	Characterized disc	Stainless steel
	O-ring	EPDM (lubricated)
	Ball	stainless steel
Suitable actuators	Non Fail-Safe	ARB(X)
	Spring	AFRB(X)

Safety notes

- WARNING: This product can expose you to lead which is known to the State of California to cause cancer and reproductive harm. For more information go to www.p65warnings.ca.gov

Product features

Application

This valve is typically used in air handling units on heating or cooling coils, and fan coil unit heating or cooling coils. Some other common applications include Unit Ventilators, VAV box re-heat coils and bypass loops. This valve is suitable for use in a hydronic system with variable flow.

Product features

Flow/Mounting details

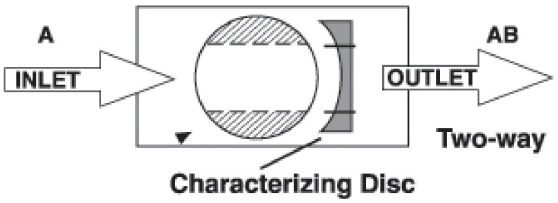

Upstream A
Downstream AB

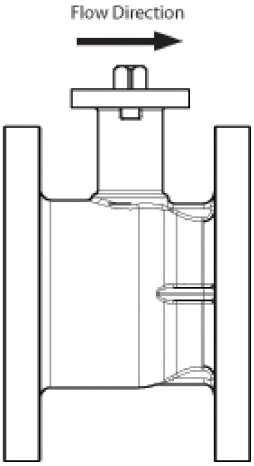

Dimensions

Type	DN	Weight
B6250S-110-250	2 1/2" [65]	29 lb [13 kg]

ARB, ARX

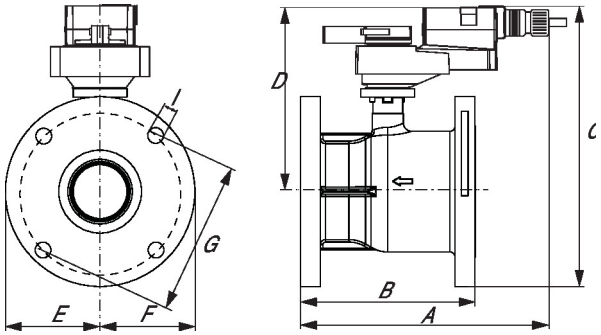

A	B	C	D	E	F	G	I	Number of Bolt Holes
8.3" [211]	5.8" [148]	11.6" [294]	7.8" [198]	3.7" [95]	3.7" [95]	5.9" [149]	0.9" [22]	8

AFRB, AFRX

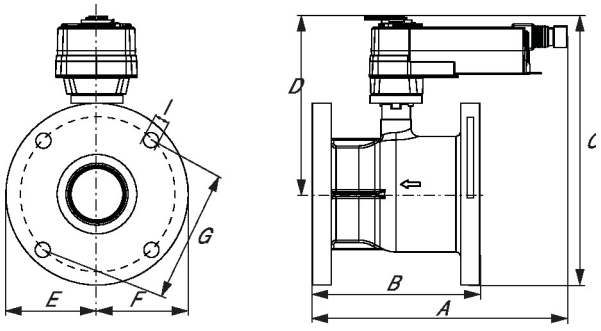

A	B	C	D	E	F	G	I	Number of Bolt Holes
8.3" [211]	5.8" [148]	12.2" [309]	9.4" [239]	3.7" [95]	3.7" [95]	5.9" [149]	0.9" [22]	8

Dimensions

ARX

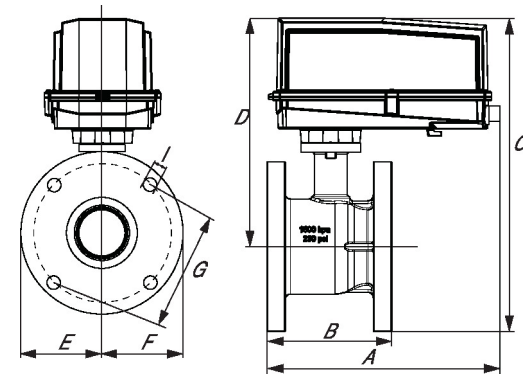

A	B	C	D	E	F	G	I	Number of Bolt Holes
13.0" [330]	5.8" [148]	15.0" [380]	7.8" [198]	3.7" [95]	3.7" [95]	5.9" [149]	0.9" [22]	8

AFRX

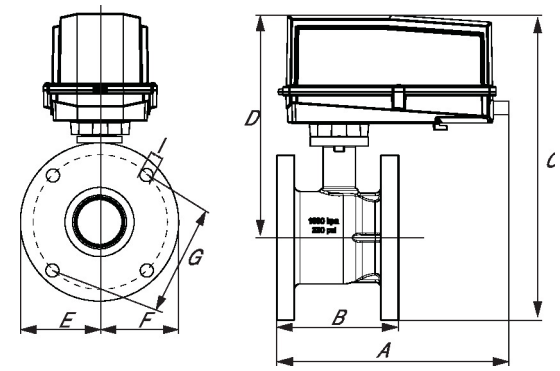

A	B	C	D	E	F	G	I	Number of Bolt Holes
14.5" [368]	5.8" [148]	16.6" [422]	11.9" [302]	3.7" [95]	3.7" [95]	5.9" [149]	0.9" [22]	8

MFT/programmable, Spring return, 24 V

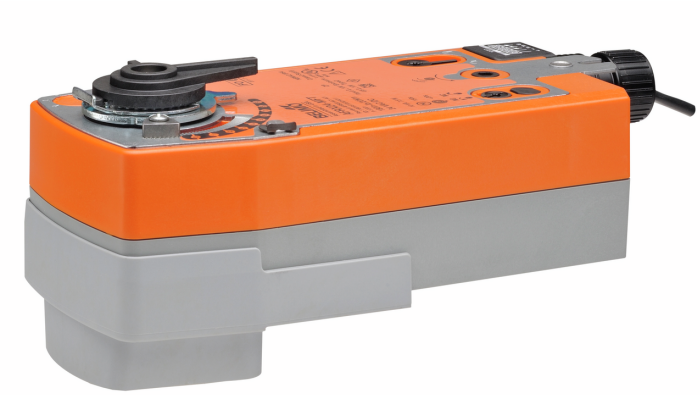

Picture may differ from product

5-year warranty

MFT

Technical data

Electrical data	Nominal voltage	AC/DC 24 V
	Nominal voltage frequency	50/60 Hz
	Nominal voltage range	AC 19.2...28.8 V / DC 21.6...28.8 V
	Power consumption in operation	7.5 W
	Power consumption in rest position	3 W
	Transformer sizing	10 VA
	Electrical Connection	18 AWG appliance or plenum cables, 1 m, 3 m or 5 m, with or without 1/2" NPT conduit connector
	Overload Protection	electronic throughout 0...95° rotation
Functional data	Operating range Y	2...10 V
	Operating range Y note	4...20 mA w/ ZG-R01 (500 Ω, 1/4 W resistor)
	Input impedance	100 kΩ for 2...10 V (0.1 mA), 500 Ω for 4...20 mA, 1500 Ω for PWM, On/Off and Floating point
	Operating range Y variable	Start point 0.5...30 V End point 2.5...32 V
	Operating modes optional	variable (VDC, PWM, on/off, floating point)
	Position feedback U	2...10 V
	Position feedback U note	Max. 0.5 mA
	Position feedback U variable	VDC variable
	Direction of motion motor	selectable with switch
	Direction of motion fail-safe	reversible with cw/ccw mounting
	Manual override	5 mm hex crank (3/16" Allen), supplied
	Angle of rotation	90°
	Running Time (Motor)	150 s / 90°
	Running time motor variable	70...220 s
	Running time fail-safe	<20 s @ 68°F [20°C]
	Sound power level, motor	45 dB(A)
	Sound power level, fail-safe	62 dB(A)
	Adaptation Setting Range	off (default)
	Position indication	Mechanical
Safety data	Power source UL	Class 2 Supply
	Degree of protection NEMA/UL	NEMA 2

Technical data

Safety data	Housing	UL Enclosure Type 2
	Agency Listing	cULus acc. to UL60730-1A/-2-14, CAN/CSA E60730-1:02 CE acc. to 2014/30/EU and 2014/35/EU
	Quality Standard	ISO 9001
	UL 2043 Compliant	Suitable for use in air plenums per Section 300.22(C) of the NEC and Section 602 of the IMC
	Ambient humidity	Max. 95% RH, non-condensing
	Ambient temperature	-22...122°F [-30...50°C]
	Storage temperature	-40...176°F [-40...80°C]
	Servicing	maintenance-free
Weight	Weight	4.8 lb [2.2 kg]
Materials	Housing material	Galvanized steel and plastic housing

Footnotes †Rated Impulse Voltage 800V, Type of action 1.AA, Control Pollution Degree 3

Product features

Default/Configuration Default parameters for 2 to 10 VDC applications of the AF..-MFT actuator are assigned during manufacturing. If required, custom versions of the actuator can be ordered. The parameters are variable and can be changed by three means: Factory pre-set or custom configuration, set by the customer using PC-Tool software or the handheld ZTH US.

Factory settings Default parameters for 2 to 10 VDC applications of the AF..-MFT actuator are assigned during manufacturing. If required, custom versions of the actuator can be ordered. The parameters are variable and can be changed by three means: Factory pre-set or custom configuration, set by the customer using PC-Tool software or the handheld ZTH US.

Accessories

Tools	Description	Type
	Connecting cable 10 ft [3 m], A: RJ11 6/4 LINK.10, B: 3-pin Weidmüller and supply connection	ZK4-GEN
	Service tool, with ZIP-USB function, for configurable and communicative Belimo actuators, VAV controller and HVAC performance devices	ZTH US

Electrical accessories	Description	Type
	Service tool, with ZIP-USB function, for configurable and communicative Belimo actuators, VAV controller and HVAC performance devices	ZTH US

Gateways	Description	Type
	Gateway MP to BACnet MS/TP	UK24BAC
	Gateway MP to Modbus RTU	UK24MOD
	Gateway MP to LonWorks	UK24LON

Electrical installation

Wire colors:
1 = black
2 = red
3 = white
5 = orange

Electrical installation

AC/DC 24 V, modulating

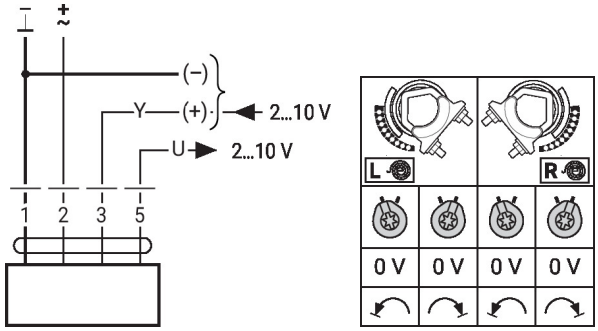

Wiring diagram piggy-back operation (mechanically coupled actuators)

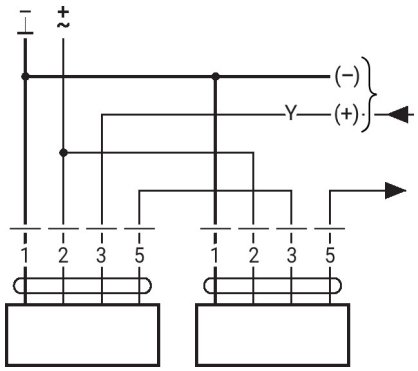

Max. 2 actuators in primary/ secondary operation
Primary/secondary operation is permitted only on one fixed shaft or on two mechanically coupled shafts
The programming of the primary actuator is adopted by the secondary actuator

Further electrical installations

Functions with basic values (conventional mode)

Override control with AC 24 V with relay contacts

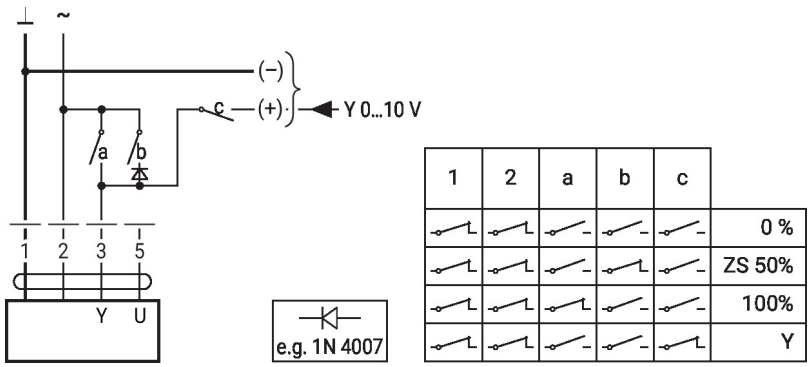

1	2	a	b	c	
					0 %
					ZS 50%
					100%
					Y

Override control with AC 24 V with rotary switch

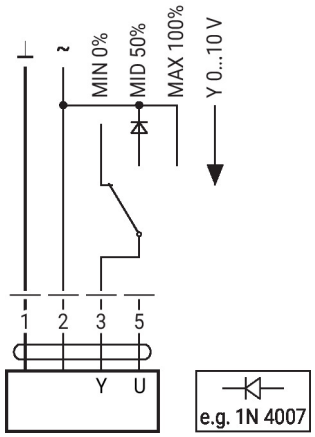

Further electrical installations

Functions with basic values (conventional mode)

Control remotely 0...100% with positioner SG..

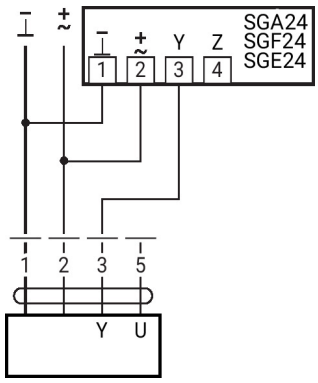

Minimum limit with positioner SG..

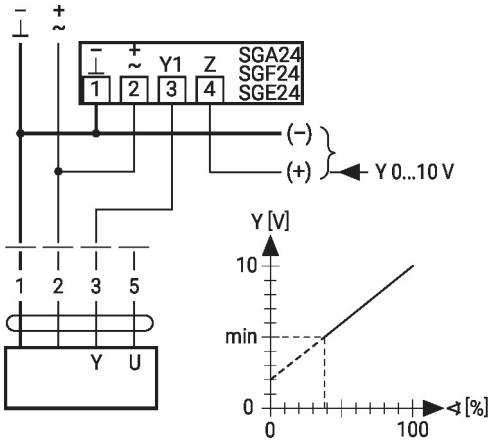

Control with 4...20 mA via external resistor

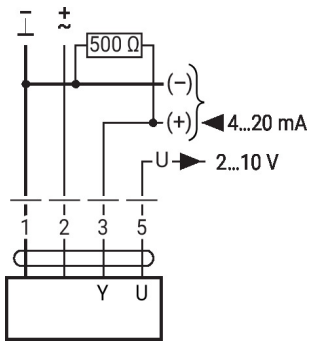

Caution:
The operating range must be set to DC 2...10 V.
The 500 Ohm resistor converts the 4...20 mA current signal to a voltage signal DC 2...10 V.

Functional check

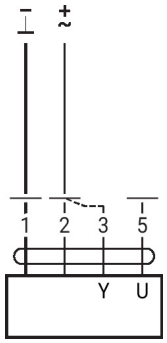

Procedure
1. Connect 24 V to connections 1 and 2
2. Disconnect connection 3:
– With direction of rotation 0: Actuator rotates to the left
– With direction of rotation 1: Actuator rotates to the right
3. Short-circuit connections 2 and 3:
– Actuator runs in opposite direction

Functions with specific parameters (configuration necessary)

Override control and limiting with AC 24 V with relay contacts

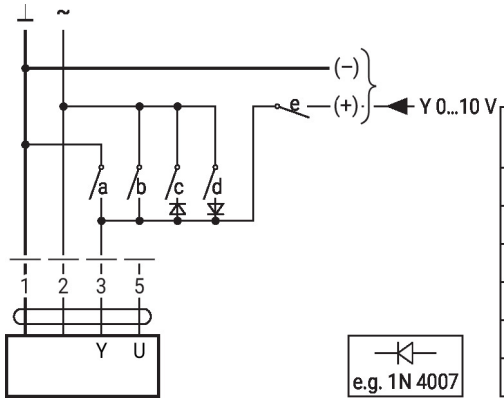

1	2	a	b	c	d	e	
							Close
							MIN
							ZS
							MAX
							Open
							Y

Control on/off

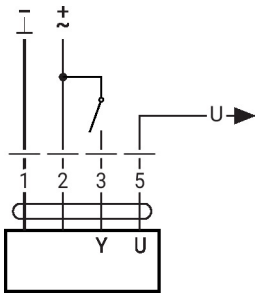

Further electrical installations

Functions with specific parameters (configuration necessary)

Control 3-point with AC 24 V

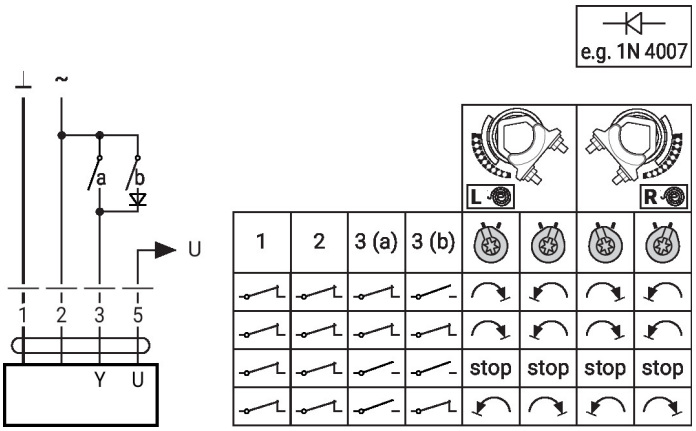

Override control and limiting with AC 24 V with rotary switch

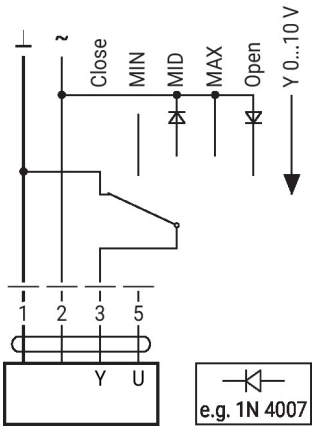

Caution:
The "Close" function is only guaranteed if the start point of the operating range is defined as min. 0.5 V.