CT1 Series

CT1R & CT1W CO2 Temp Recessed & Wall



Auto calibrates

15+ year life expectancy

Dual channel option available

0-2,000ppm default range, 0-5,000 and 0-10,000ppm selectable range (with display)

DESCRIPTION

The Senva CT1 Series comes in our newly engineered enclosure, making it the most attractive and quickest-installed CO2 sensor on the market. Designed with a selectable analog output and a variety of thermistor options allows flexibility on-site and ease of ordering. It mounts easily in any junction box, or it can be unobtrusively mounted directly to drywall using Senva's built-in drywall clamps. Save installation time and energy costs with this versatile product.

APPLICATIONS

- Controlling ventilation in response to occupancy
- Facilitating compliance with ASHRAE 62.1 standard for air quality
- Offices, conference rooms, and public assembly areas
- Greenhouses, hospitals, convenience stores, etc (dual channel version)



CT1R drywall clamps make installation simple without a junction box



CT1W Tamper proof push-in lock tabs - great for schools!



Made in America - Best in industry 7-year warranty!

FEATURES

- Mounts easily in standard wall plates
- Innovative drywall clamps allow unobtrusive and secure mounting without a junction box
- Ideal for schools and institutional environments
- Analog output provides 0-5,V, 0-10V, or 3-wire 4-20mA
- Thermistor outputs for temperature optional
- Optional LCD display
- Optional Dual Channel element
- Non-dispersive infrared sensing element (NDIR)
- 15+ year life expectancy on CO2 sensing element
- High Accuracy: ± 30 ppm, ± 3% of reading
- Auto-calibration mode returns sensor to baseline values

ORDERING

CT1 [ ] - [ ] [3] [ ] - [ ]

Enclosure
R = Recessed Wall
W = Wall

Temperature
A= None
B= Transmitter*
C= 100PtRTD
D= 1000PtRTD
E= 10K Type 2
F= 10K Type 3
G= 10K W/ 11K
H= 3K
I = 2K2
J = 1K8
K = 20K
L= 100K

Output
3= 4-20mA, 0-5V, 0-10V 3-Wire Connection

Display (LCD)
X= None
D=Display+ Setpoint Relay

Dual Channel
BLANK= None
D=Dual Channel CO_2 Element

* Order B=transmitter to display temperature reading; thermistor and RTD options will not display temperature on LCD

Replacement Sensors:

AQS - [CO2]	Replacement CO2 Sensor
AQS - [D] [CO2]	Replacement Dual CO2 Sensor

DIMENSIONS

CT1R

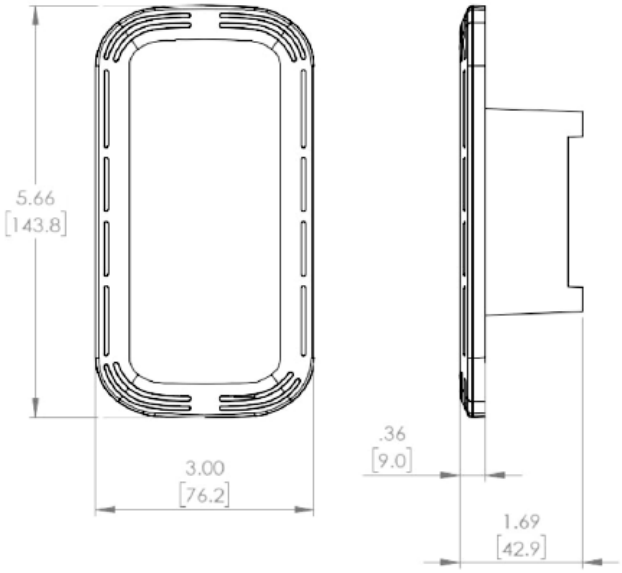

CT1W

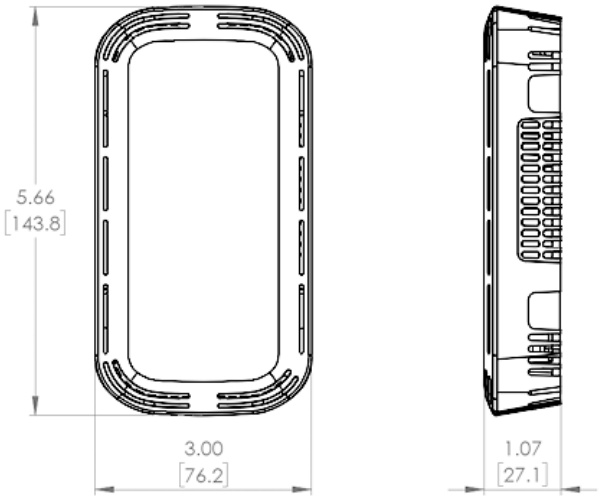

Warning: The datasheet is designed for reference only. Refer to installation instructions that accompany the product and heed all safety instructions. Product improvement is a continuing process at Senva. Changes may occur to products without prior notice.

SPECIFICATIONS

Power Supply		24VAC(1), 100mA max / 12-30VDC, 50mA max
Analog Outputs	Analog	3-wire 4-20mA and 0-5V/0-10V(2) (dip switch selectable)
	Output scaling	0 - 2000 (default) or 0 - 5000 ppm (selectable)
Digital Setpoint Output	Programmable	Solid-state, 1A @ 30VAC/DC, N.O. on LCD version only.
CO_2 Sensor Performance	Type	Non-dispersive Infrared (NDIR)
	Accuracy (Standard)	±(30ppm +3% of reading) (400-2000ppm), @-10-50°C
		±(50ppm +5% of reading) (2000-5000ppm), @-10-50°C
		±(100ppm+10% of reading) (5000-10000ppm), @ 0-50C
	Accuracy (Dual Channel)	±(30ppm+3% of reading) (0-2000ppm), @ 0-50C
		±(50ppm+3% of reading) (2000-5000ppm), @ -10-50C
		±(100ppm+10% of reading) (5000-10000ppm), @ 0-50C
	Drift with ABC disabled (Standard)	35ppm/month (3)
	Drift with ABC disabled (Dual Channel)	5ppm/month (3)
	Range	0-2000/5000ppm; Programmable up to 10,000ppm
	Response time	60s to 90% reading
	Output update rate	1s
	Element Operating Environment	14 to 144°F (-10 to 50°C), 0 to 95% RH
LCD Menu Setup Parameters	SPH, Setpoint, Hi (On point)	500ppm to full-scale (800ppm default)
	SPL, Setpoint, Lo (Off point)	400ppm to full-scale (700ppm default)
	SCL, Scaling	0-2000ppm, 0-5000ppm, 0-10000ppm (2000ppm default)
	ADJ, Adjustment	Offset adjustment +/-250ppm (0 default)
	CAL, Calibration mode	Automatic mode ON or OFF (default=ON)
	RUN, Run mode	Displays CO2 in ppm
Operating Environment	Temperature	14 to 122oF (-10 to 50oC)
	Humidity	0-95% non-condensing
Temperature Tansmitter	Accuracy	<±0.2°C
	Resolution	0.01°C
	Repeatability	0.04°C
	Response time	2s
	Output update rate	0.5s
	Element Operating range	-40 to 140°F (-40 to 60°C)
Environmental	Enclosure Rating	IP20/NEMA 1
	Dimensions	5.66'"h x 3.00"w x 0.36"d (1.69"d including recessed portion)
	Max Operating Temp	14 to 122°F (-10 to 50°C)
Enclosure	Material	ABS Plastic
	Dimensions (fits low-voltage bracket)	5.66”h x 3.0”w x 1.69”d (1.07d” for surface mount)

(1) One side of transformer secondary is connected to signal common. Dedicated transformer is recommended.

(2) 15-30VDC/24VAC power supply voltage required for 10 volt output.

(3) Relay only available with display.

(4) It is not recommended to de-activate ABC (auto-calibration) except for continuously occupied spaces or greenhouses. Drift ratings may vary based on environment.

(5) Operation outside of element operating environment may result in reduced accuracy

** Product improvement is a continual process at Senva and product features and specification may change without prior notice. Refer to instructions that accompany the product for installation and wiring.*