CT1O Series

CT1O CO2 Temp Outdoor



Auto calibrates

15+ year life expectancy

Dual channel comes standard

0-2,000ppm default range, 0-5,000 and 0-10,000ppm selectable range (with display)

DESCRIPTION

Featuring a gold plated dual-channel NDIR sensor for the best accuracy and the highest reliability for your outdoor or greenhouse sensing needs. An optional built-in LCD display makes set up a snap, and a standard solid-state setpoint relay makes demand ventilation simple. Dual 4-20mA and 0-10/5 vdc outputs.

APPLICATIONS

- Controlling ventilation in response to occupancy
- Facilitates compliance with ASHRAE 62.1 standard for air quality
- Outdoor or greenhouse applications



Rugged enclusure



Field replaceable CO2 element for lower total lifetime cost



Made in the USA - Industry best 7-year warranty!

FEATURES

- Integrated display and push-button menus for field selectable scale, calibration, and operational modes
- Dual 4-20mA and 0-5V/0-10V output (jumper selectable)
- Integrated high-reliability solid-state set-point relay is ideal for direct control applications; easy to set up thanks to LCD
- Non-dispersive infrared sensing element (NDIR)
- Field replaceable dual-channel CO2 sensor
- 15+ year life expectancy on CO2 sensing element
- Industry leading 7-year limited warranty on electronics; NDIR module 3 years
- ±30ppm, ±3% of reading

ORDERING

CT1	O	-		3	
	Enclosure		**Temperature**	**Output**	**Display**
	O= Outdoor		A= None B= Transmitter* C= 100PtRTD D= 1000PtRTD E= 10K Type 2 F= 10K Type 3 G= 10K W/ 11K H= 3K I = 2K2 J = 1K8 K = 20K L= 100K	3= 4-20mA, 0-5V, 0-10V 3-Wire Connection	X= None D=Display

* Order B=transmitter to display temperature reading; thermistor and RTD options will not display temperature on LCD

To order replacement sensor elements, please consult factory.

* All outdoor CT1O models use dual channel elements for high reliability!

Replacement Sensors:

AQS - D CO2 Replacement Dual CO2 Sensor

DIMENSIONS

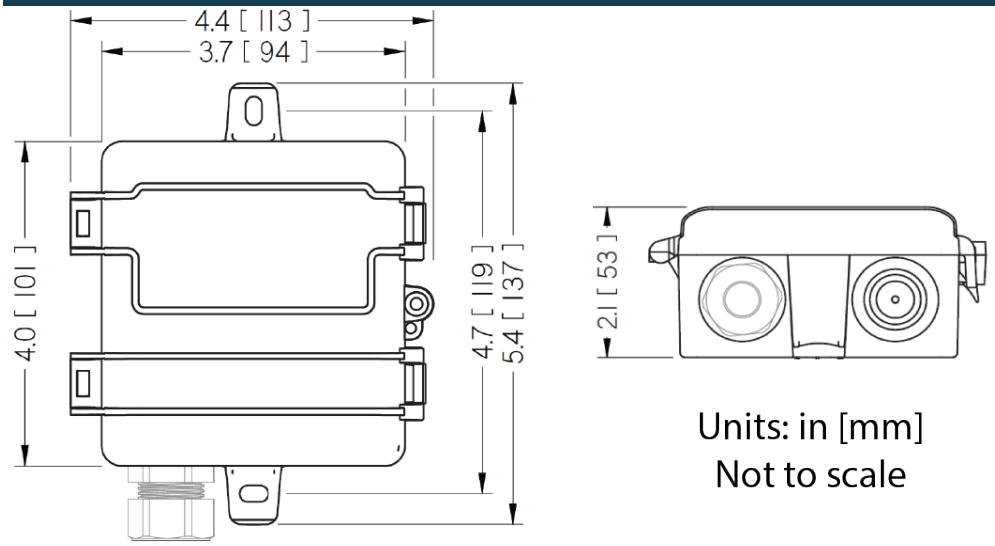

Units: in [mm]
Not to scale

Warning: The datasheet is designed for reference only. Refer to installation instructions that accompany the product and heed all safety instructions. Product improvement is a continuing process at Senva. Changes may occur to products without prior notice.

SPECIFICATIONS

Power Supply		12-30VDC/24VAC(1), 100mA max.
Analog Outputs	Dual Analog	3-wire 4-20mA and 0-5V/0-10V (2) (jumper)
	Output scaling	0 - 2000 or 0 - 5000 ppm (selectable)
Set-point Relay	Programmable	Solid-state, 1A @ 30VAC/DC, N.O.
Sensor Performance	Type	Non-dispersive Infrared (NDIR)
	Accuracy (Standard)	±30ppm, ±3% of reading (400-2000ppm), @-10-50°C, 0-85%RH
		±50ppm, ±5% of reading (2000-5000ppm), @-10-50°C, 0-85%RH
		±100ppm, ±10% of reading (5000-10000ppm), @ 0-50°C, 0-85%RH
	Accuracy (Dual Channel)	±30ppm, ±3% of reading (400-2000ppm), @ 0-50°C, 0-85%RH
		±50ppm, ±3% of reading (2000-5000ppm), @-10-50°C, 0-85%RH
		±100ppm, ±10% of reading (5000-10000ppm), @ 0-50°C, 0-85%RH
	Drift with ABC disabled (Standard)	35 ppm/month
	Drift with ABC disabled (Dual Channel)	5 ppm/month
	Pressure Dependency	+1% reading per kPa (0.143PSI) deviation from nominal (101kPa, 14.7PSI)
	Response time	60 seconds to 90% reading
	Output update rate	1 second
	Element Operating Environment	4 to 122°F (-20 to 50°C), 0 to 95% RH
LCD Menu Setup Parameters	SPH, Setpoint, Hi (On point)	500ppm to full-scale (800ppm default)
	SPL, Setpoint, Lo (Off point)	400ppm to full-scale-50 (700ppm default)
	SCL, Scaling	0-2000ppm or 0-5000ppm (2000ppm default)
	ADJ, Adjustment	Offset adjustment +/-250ppm (0 default)
	CAL, Calibration mode	Automatic mode ON or OFF (default=ON)
	RUN, Run mode	Displays CO2 in ppm
Operating Environment	Temperature	-4 to 122F (-20 to 50C)
	Humidity	0-95% non-condensing
Enclosure	Material	Polycarbonate; aluminum tube
	Dimensions	4.0”h x 4.4”w x 2.1”d

1. One side of transformer secondary is connected to signal common. Dedicated transformer is recommended.
2. 15-30VDC/24VAC power supply voltage required for 10 volt output.
3. Operating outside of element operating environment may result in reduced accuracy.
4. Time for reaching 63% of reading at 25oC and 1 m/s airflow.
5. It is not recommended to de-activate ABC (auto-calibration) except for continously occupied spaces or greenhouses. Drift ratings may vary based on environment.

** Product improvement is a continual process at Senva and product features and specification may change without prior notice. Refer to instructions that accompany the product for installation and wiring.*