SIEMENS

OpenAir™

Air Damper Actuators Modbus RTU

GPC.., GMA.., GCA.. Spring return types



Air Damper actuators 4 Nm / 7 Nm / 18 Nm (spring return) with Modbus communication

- GPC161.1A/RW-MO 4 Nm nominal torque
- GMA161.1E/MO 7 Nm nominal torque
- GCA161.1E/MO 18 Nm nominal torque
- Modbus RTU communication
- Operating voltage DC 24 V (GPC161.1A/RW-MO), AC/DC 24 V (GMA161.1E/MO, GCA161.1E/MO)
- For air-handling units (AHU) and other ventilation applications
- Spring return function

Functions

Function	Description
Communication	Modbus RTU (RS-485), not galvanically separated
Functions	• Setpoint and actual position 0..100% • Override control Open / Close / Min / Max / Stop • Setpoint monitoring and backup mode
Supported baud rates	9.6, 19.2, 38.4, 57.6, 76.8, 115.2 kbaud
Supported transmission formats	1-8-E-1, 1-8-N-1-, 1-8-O-1, 1-8-N-2
Termination	120 Ω electronically switchable

Type summary

Product no.	Stock no.	Operating voltage	Positioning signal	Power consumption	Posit. time	Manual adjust-ment [2]	Position feedback
GPC161.1A/RW-MO	S55498-D100	DC 24 V	Modbus RTU	DC: 2.7 max.	60 s	No	Yes
GMA161.1E/MO	S55499-D300	AC/DC 24 V		AC: 5 VA / 3.5 W max.[1] DC: 3.5 W max.	90 s (15 s spring return)	Yes	Yes
GCA161.1E/MO	S554 99-D301			AC: 7 VA / 5 W max.[1] DC: 4 W max.			

[1] max. = actuator rotates

[2] Without supply voltage, the rotary actuator can be turned to any angular position using the Allen key provided and locked in place. The rotary actuator returns to the zero position (actuator closed) by mechanical unlocking with the Allen key or by briefly applying the supply voltage.

Ordering (Example)

Product no.	Stock no.	Description	Amount
GMA161.1E/MO	S55499-D300	Damper actuator Modbus	1
+ accessories (shaft inserts, etc.)			

Accessories / Spare parts

GMA..	Please refer to data sheet N4697
GCA..	Please refer to data sheet N4699

Equipment combinations

Product no.	Stock no.	Doc. type	Doc. number
POL424.50/STD POL424.70/STD	S55394-C245-A100 S55394-C247-A100	Datasheet	Q3973
		Operating manual	P3973
POL635.00/STD	BPZ:POL635.00/STD	Datasheet	Q3230
		Operating manual	P3903
POL638.00/STD POL638.70/STD	BPZ: POL638.00/STD S55396-C387-A100	Datasheet	Q3900
		Operating manual	P3903

Product documentation

Title	Topic	Document ID
Rotary damper actuators spring return GMA..	Detailed information about rotary actuators with spring return (7 Nm)	Z4614
Rotary damper actuators spring return GCA..	Detailed information about rotary actuators with spring return (18 Nm)	Z4613
Climatix AHU Application	Application description	A3975
Installation Instruction GMA161.1E/MO GCA161.1E/MO	Installation of types with external Modbus interface	A6V101006034
Installation Instruction GPC161.1A/RW-MO	Installation of actuators with external Modbus interface	A6V14490279

Related documents such as environmental declarations, CE declarations, etc., can be downloaded at the following Internet address: http://siemens.com/bt/download

Notes

Safety

⚠ Caution

National safety regulations

Failure to comply with national safety regulations may result in personal injury and property damage.

- Observe national provisions and comply with the appropriate safety regulations.
- Use only properly trained technicians for mounting, commissioning, and servicing.

Mounting

Note: Do not open the damper actuators

Mounting positions

IP54 protection in following mounting positions

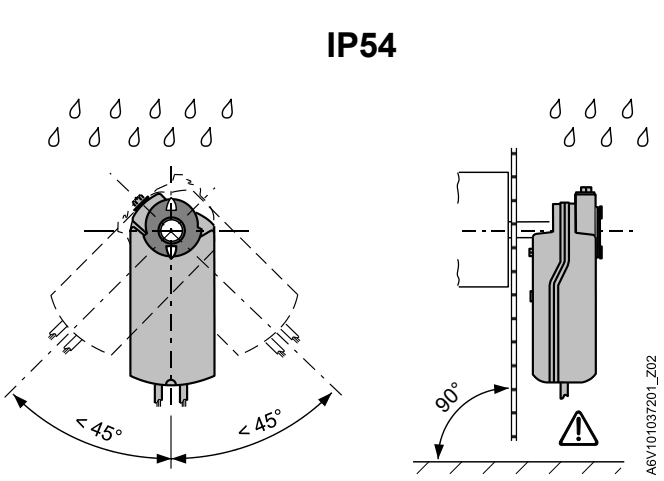

Commissioning

The devices were developed specifically for use with Climatix pushbutton configuration as described in document CE1A3975 [1].

The bus configuration can alternatively be configured via the local HMI, see "User interface" (page 5).

Check the following during commissioning:

- *Bus configuration* (address, baud rate, transmission format and optional bus termination). The initial address 255 [2] allows multiple actuators to be mounted and commissioned at the same time without interfering with each other.
- *Actuator parameters* (opening direction, positioning limits, position adaption etc.). These values can be read via the Modbus register. Parameters may not be written cyclically.

[1] Documents can be downloaded at http://siemens.com/bt/download.

[2] The address 255 means "unassigned", and must be adjusted for the adapter to be operable.

Full or partial configuration via bus

The devices can be configured via bus if the pre-commissioning settings allow for a connection between the Modbus client/programming tool and peripheral devices (i.e. non-conflicting addresses and matching baud rate / transmission format).

- *Full configuration via bus:* Given a unique Modbus address, the client/programming tool can establish a connection after start-up using the presets for transmission format and baud rate (or auto-baud).
- *Partial configuration via bus:* Given a non-unique Modbus address, the address must first be set to a unique value, either by inputting it with the pushbutton (cf. page 7) or by setting the address to 246 by pressing the pushbutton 5...10 seconds (cf. page 5). Subsequently, the client/programming tool can establish a connection after start-up using the presets for transmission format and baud rate (or auto-baud).

Once a connection is established, the bus and actuator parameters can be set via bus to the intended values. When writing to the bus parameters, "1 = Load" must be written to Reg. 768 within 30 seconds; otherwise, the changes are discarded.

Example: The table shows the register values before and after changing them via bus access.

Reg.	Name	Before change	After change
764	Modbus Address	246	12
765	Baud rate	0 = auto	1 = 9600
766	Transmission Format	0 = 1-8-E-1	3 = 1-8-N-2
767	Termination	0 = Off	0 = Off
768	Bus Conf. Command	0 = Ready	1 = Load

Maintenance

The damper actuators are maintenance-free.

Disconnect the electrical connections from the terminals if you want to work at the device.

Disposal



⚠ WARNING

Tensioned return spring

Opening the actuator housing can release the tensioned return spring resulting in flying parts that may cause injury.

- Do not open the actuator body.



The device is considered electrical and electronic equipment for disposal in terms of the applicable European Directive and may not be disposed of as domestic garbage.

- Dispose of the device through channels provided for this purpose.
- Comply with all local and currently applicable laws and regulations.

Warranty

Technical data on specific applications are valid only together with Siemens products listed under "Equipment combinations". Siemens rejects any and all warranties in the event that third-party products are used.

User Interface

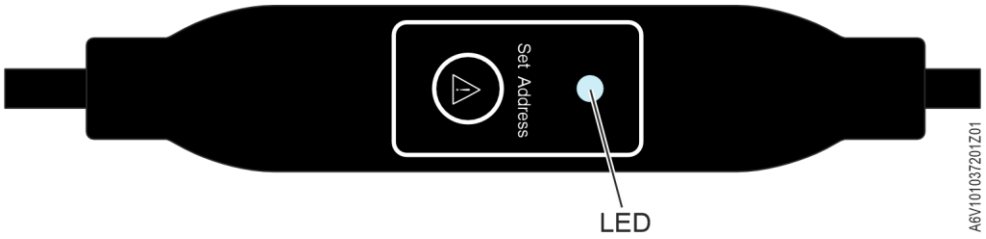

Pushbutton operation

Action		Pushbutton operation	Feedback
Return current Modbus address (starting from lowest digit)		Briefly press button 1 x (<1 s)	• 1st digit (single digit): red • 10-digit (double digit): green • 100-digit (triple digit): orange LED blinks blue 1 x after address indication if bus termination is switched on. Example: 124 = 4 x red, 2 x green, 1 x orange
Switch bus termination on/off			
	Switch on	Press button 3 x Wait >1 s	LED stops blinking/flashing.
		Within 10 s: Briefly press button 1 x (<1 s)	LED flashes blue 1 x blue (termination mode) on. Button not pressed within 10 s: • Address (and bus termination, if applicable) is indicated. • Device enters normal mode.

		Within 10 s: Press and hold button until LED turns red	LED is lit red (confirmation). Button not pressed within 10 s: ● Address (and bus termination, if applicable) is indicated. ● Device enters normal mode.
		Release button	LED turns off. Address is indicated. LED blinks blue 1 x after address indication (termination mode on). Device enters normal mode.
	Switch off	Press button 3 x Wait >1 s	LED stops blinking/flashing.
		Within 10 s: Press and hold button until LED turns red	LED is lit red (confirmation). Button not pressed within 10 s: ● Address (and bus termination, if applicable) is indicated. ● Device enters normal mode.
		Release button	LED turns off. Address is indicated. [LED DOES NOT flash blue following address indication (termination mode off).] Device enters normal mode.
Enter Modbus address with pushbutton		Press and hold button 1...5 s	See "Enter address with pushbutton" (page 7)
Enable pushbutton addressing (when using Climatix controllers)		Press and hold button 5...10 s	LED is lit red and turns off after 5 s.
		Release button	LED is lit orange.
Reset to factory settings		Press and hold button >10 s	LED flashes orange.

LED colors and blinking patterns

Color	Blinking pattern	Description
Green	1 s on / 5 s off	Normal mode without bus traffic
	Flickering	Normal mode with bus traffic
Orange [1] / Green	1 s orange / 1 s green	Override control mode
Orange [1]	1 s on / 1 s off	Bus parameters not yet configured
	1 s on / 5 s off	Backup mode (replacement mode)
Red	Steady	● Mechanical error ● Device jammed ● Manual intervention ● Calibration
	1 s on / 5 s off	Internal error
	0.1 s on / 1 s off	Invalid configuration, e.g. Min = Max
Blue	Flickers 1 x after indicating the address	Bus termination active

[1] Die Farbe der orangefarbenen LED kann je nach Blinkwinkel leicht variieren und eher gelb oder leicht grünlich erscheinen.

Reset actuator with push button

1. Press and hold button >10 s.
   ⇨ LED flashes **orange**.
2. Release button *while* LED is flashing.
   ⇨ LED flashes for another 3 s.
   ⇨ If the button is pressed again *during* these 3 s, **the reset is canceled**.
3. Press button *after* these 3 s.

⇨ LED is lit **red** (reset) while the device restarts.

Enter address with pushbutton

Display current address (starting with lowest address digit)

The Modbus address can be set without an extra tool using pushbutton addressing.

◈ Briefly press button (<1 s).

⇨ Current Modbus address is indicated.

Colors / blinking pattern		
1-digit: **red**	10-digit: **green**	100-digit: **orange**

Example for address 124:	
LED	
Note	The address is both entered and indicated starting at the lowest digit (1st digit), see figure above. (Example: 124 starts with 4 x red)

Enter new address (starting from lowest address digit)

1. **Enter addressing mode:**
   - Press button >1 s, until LED is lit **red**.
   - Release button (before LED turns off).
2. **Enter digits: Press button n times.**
   ⇨ LED flashes 1 x per press of the button as feedback.
   Colors: 1-digit: **red** / 10-digit: **green** / 100-digit: **orange**
3. **Save digits:**
   - Press and hold button, until LED is lit the color of the following digit.
   - Release button.
4. **Save address:**
   - Press button, until LED is lit **red** (confirmation).
   - Release button.

⇨ Address is saved and repeated 1 x as confirmation.

Digits are skipped by holding the button until the LED is lit the color of the digit to be entered.

An address can be saved at any point, i.e. already after setting the 1-digit, or after setting the 1- and 10-digits.

If after entering the address, the button is released before the LED is lit red, the entered address is discarded.

Examples

Set address "124"

1. Enter addressing mode: press button 1...5 s.
2. Enter 1-digit: press button 4 x.
   ⇨ LED flashes **red** 1 x per press of the button.
3. Save 1-digit: press and hold button.
   ⇨ LED is lit **green**.
4. Release button.
5. Enter 10-digit: press button 2 x.
   ⇨ LED flashes **green** 1 x per press of the button.
6. Save 10-digit: press and hold button.
   ⇨ LED is lit **orange**.
7. Release button.
8. Enter 100-digit: press button 1 x.
   ⇨ LED flashes **orange** 1 x per press of the button.
9. Save address: press and hold button.
   ⇨ LED is lit **red**.
10. Release button.

⇨ Address is saved and repeated 1 x as confirmation.

Set address "50"

1. Enter addressing mode: press button 1...5 s.
2. Skip 1-digit: press and hold button.
   ⇨ LED is lit **green**.
3. Release button.
4. Enter 10-digit: press button 5 x.
   ⇨ LED flashes **green** 1 x per press of the button.
5. Save 10-digit: press and hold button.
   ⇨ LED is lit **orange**.
6. Release button.
7. Save address (skip 100-digit): press and hold button.
   ⇨ LED is lit **red**.
8. Release button.

⇨ Address is saved and repeated 1 x as confirmation.

Set address "7"

1. Enter addressing mode: press button 1...5 s.
2. Enter 1-digit: press button 7 x.
   ⇨ LED flashes **red** 1 x per press of the button.
3. Save address (skip 10- and 100-digits): press and hold button.
   ⇨ LED is lit **red**.
4. Release button.

⇨ Address is saved and repeated 1 x as confirmation.

Modbus registers

Reg.	Addr.	Name	R/W	Unit	Scaling	Range / enumeration
Process Values						
1	0	Setpoint	RW	%	0.01	0...100 % = 0...10000
2	1	Override control	RW	--	--	0 = Off / 1 = Open / 2 = Close / 3 = Stop / 4 = GoToMin / 5 = GoToMax
3	2	Actual position	R	%	0.01	0...100 % = 0...10000
256	255	Command	RW	--		0 = Ready / 1 = Adaption / 2 = Self-test / 3 = ReInitDevice / 4 = RemoteFactory Reset

Reg.	Addr.	Name	R/W	Unit	Scaling	Range / enumeration
Parameters [1]						
257	256	Opening direction	RW	--	--	0 = CW / 1 = CCW
258	257	Adaptive mode	RW	--	--	0 = Off / 1 = On
259	258	Operating mode	RW	--	--	1 = POS
260	259	MinPosition	RW	%	0.01	0...100 % = 0...10000
261	260	MaxPosition	RW	%	0.01	0...100 % = 0...10000
262	261	Actuator running time	R	s	1	90
513	512	Backup mode	RW	--	--	0 = Go to BackupPosition / 1 = Keep last position / 2 = Disabled
514	513	Backup position	RW	%	0.01	0...100 % = 0...10000
515	514	Backup timeout	RW	s	1	0…900
516	515	Startup setpoint	RW	%	0.01	0...100 % = 0...10000
764	763	Modbus address	RW	--	--	1…245 246 = On-event addressing 255 = "unassigned" [2]
765	764	Baud rate	RW	--	--	0 = auto / 1 = 9600 / 2 = 19200 / 3 = 38400 / 4 = 57600 / 5 = 76800 / 6 = 115200
766	765	Transmission format	RW	--	--	0 = 1-8-E-1 / 1 = 1-8-O-1 / 2 = 1-8-N-1 / 3 = 1-8-N-2
767	766	Bus termination	RW	--	--	0 = Off / 1 = On
768	767	Bus conf. command	RW	--	--	0 = Ready / 1 = Load / 2 = Discard
769	768	State	R	--	--	See below, Register 769 “State”

[1] Parameters may not be written cyclically!

[2] If the address is set to 248 or higher, it is instead automatically set to the initial address 255 as soon as Reg. 268 is set to 1 ("Load").

Reg.	Name	R/W	Meaning	Example
Statistics/Counters				
1025	Cumulated up time (HWord)	R	HWord + LWord = cumulated time device has been on (hex), i.e. the motor has been running or holding, in seconds	• 1025 = 00 12 (hex) • 1026 = A2 E1 (hex) • 12A2E1 (hex) → 1221345 (dec) ➔ Cum. up time = 1’221’345 s
1026	Cumulated up time (LWord)	R		
1027	Cumulated running time (HWord)	R	HWord + LWord = cumulated running time (hex), i.e. for how long has the motor run, in seconds	• 1027 = 00 08 (hex) • 1028 = 12 51 (hex) • 81251 (hex) → 528977 (dec) ➔ Cum. running time = 528.977 s
1028	Cumulated running time (LWord)	R		

Reg.	Name	R/W	Meaning	Example
Statistics/Counters				
1029	Repositioning counter (HWord)	R	HWord + LWord = how often has the positioning signal been changed	• 1029 = 00 00 (hex) • 1030 = A0 01 (hex) • A001 (hex) → 40961 (dec) ➔ Repositioned = 40.961 times
1030	Repositioning counter (LWord)	R		
1031	Power-up counter	R	How often (hex) has the device been started up	• 1031 = 00 A2 (hex) → 162 (dec) ➔ Powered up = 162 times
1032	Jam counter	R	How often (hex) has the device breached the valve jam tolerance (reg. 264)	• 1032 = 00 02 (hex) → 2 (dec) ➔ Jams counted = 2

Reg.	Name	R/W	Meaning	Example
Device information				
1281	Factory index	R	Two bytes, each encoding an ASCII character	• 1281 = 00 5A (hex) → 0Z ➔ Device is of series = "Z"
1282	Factory date (HWord)	R	Two bytes, the lower encoding the year (hex)	• 1282 = 00 18 (hex) • 1283 = 02 0F (hex)
1283	Factory date (LWord)	R	Two bytes, HByte encoding the month (hex), LByte encoding the day (hex)	➔ Device was manufactured = February 15, 2024
1284	Serial number (HWord)	R	HWord + LWord = Serial no. (hex)	• 1284 = 00 0A (hex) • 1285 = A2 06 (hex) • → AA206 (hex) = 696838 (dec) ➔ Device has serial no. = "696838"
1285	Serial number (LWord)	R		
1289	Firmware version (HWord)	R	Two bytes, HByte corresponds to the major version, LByte corresponds to the minor version	• 1289 = 03 01 (hex) • 1290 = 03 07 (hex) → 775 (dec) ➔ Firmware version = "03.01.0775"
1290	Firmware revision (LWord)	R	Two bytes, encoding the patch version (hex)	
1291	Hardware version	R	Two bytes, each encoding an ASCII character	• 1291 = 42 00 (hex) ➔ Hardware version = "B"
1409...16	ASN [characters 16...1]	R	Two bytes per register, each of which encodes an ASCII character. First characters encoded in Reg. 1409.	• 1409 = 47 4C (hex) → GL • 1410 = 42 31 (hex) → B1 • 1411 = 36 31 (hex) → 61 • 1412 = 2E 39 (hex) → .9 • 1413 = 45 2F (hex) → E/ • 1414 = 4D 4F (hex) → MO ➔ ASN = "GLB161.9E/MO"

	HWord		LWord	
	-	YY	MM	DD
Hex	00	18	02	0F
Dec	00	24	02	15

Register 769 "State"

Service flags			
Bit 00	1 = Reserved	Bit 06	1 = Adaption done
Bit 01	1 = Backup mode active	Bit 07	1 = Adaption in progress
Bit 02	1 = Reserved	Bit 08	1 = Adaption error
Bit 03	1 = Reserved	Bit 09	1 = Self-test failed
Bit 04	1 = Mechanical fault, device jammed, manual override [1] or calibrating [1]	Bit 10	1 = Self-test successful
Bit 05	1 = Nom. lifetime exceeded	Bit 11	1 = Invalid configuration

[1] After 10 seconds

Supported function codes

Function codes	
03 (0x03)	Read Holding Registers
04 (0x04)	Read Input Registers
06 (0x06)	Write Single Register
16 (0x10)	Write Multiple Registers (Limitation: Max. 120 registers within one message)

Technical data

Power supply		
Operating voltage	GPC161.1A/RW-MO	DC 24 V ± 20 % (SELV)
	G..A161.1E/MO	AC 24 V ± 20 % (SELV) DC 24 V ± 20 % (SELV) or AC 24 V class 2 (US)
Frequency		50/60 Hz
Power consumption	at 50 Hz	
Actuator holds	GPC161A/RW-MO	AC: 3.4 VA / 2 W // DC : 2 W
	GMA161.1E/MO	AC / DC: 2.5W
	GCA161.1E/MO	AC: 5 VA / 3 W // DC: 3 W
Actuator rotates	GPC161.1A/RW-MO	AC: 4.4 VA / 2.7 W // DC : 2.7 W
	GMA161.1E/MO	AC: 5 VA / 3.5 W // DC: 3.5W
	GCA161.1E/MO	AC: 7 VA / 5 W // DC: 4 W

Function data		
Running time for rotary angle 90° (motor operation)	GPC161.1A/RW-/MO	60 s
	G..A161.1E/MO	90 s
Closing time with return spring (power failure)	GPC161.1A/RW-/MO	15 s
	G..A161.1E/MO	
Nominal torque	GPC161.1A/RW-/MO	4 Nm
	GMA161.1A/MO	7 Nm
	GCA161.1A/MO	18 Nm
Maximum torque	GPC161.1A/RW-MO	9 Nm
	GMA161.1A/MO	< 21 Nm
	GCA161.1A/MO	< 50 Nm
Nominal / maximum rotation angle		90° / 95° ± 2°
Direction of rotation	Adjustable over bus	Clockwise (CW) / Counter-clockwise (CCW)

Communication		
Communication protocol	Modbus RTU	RS-485, not galvanically separated
	Number of nodes	Max. 32
	Address range	1...245 / 255 Default: 255
	Transmission formats	1-8-E-1 / 1-8-O-1 / 1-8-N-1 / 1-8-N-2 Default: 1-8-E-1
	Baud rates (kBaud)	Auto / 9.6 / 19.2 / 38.4 / 57.6 / 76.8 / 115.2 Default: Auto
	Termination	120 Ω electronically switchable Default: Off

Connection cables		
Cable length		0.9 m
Power supply / Communication	Number of cores and cross-sectional area	5 x 0.75 mm^2

Degree of protection		
Degree of protection	Degree of protection acc. to EN 60529 (see also chapter 'Mounting' above)	IP54
Safety class	Safety class acc. to EN 60730	III

Environmental conditions		
Applicable standard		IEC 60721-3-x
Operation	Climatic conditions	Class 3K5
	Mounting location	Indoors
	Temperature general	-32…55 °C
	Humidity (non condensing)	< 95 % r. h.
Transport	Climatic conditions	Class 2K3
	Temperature	-32…70 °C
	Humidity	< 95 % r. h.
Storage	Climatic conditions	Class 1K3
	Temperature	-5…45 °C
	Humidity	< 95 % r. h.

Directives and Standards			
Product standard		EN60730-x	
Electromagnetic compatibility (Application)	For residential, commercial and industrial environments		
	GPC161.1A/RW-MO	**GMA161.1E/MO**	**GCA161.1E/MO**
EU Conformity (CE)	A5W00029693	8000081792 [1)]	A5W00004370 [1)]
UK Conformity (UKCA)	A5W00219545A	A5W00198017A [1)]	A5W00198156A [1)]
RCM Conformity	A5W00029694	8000081793 [1)]	A5W00004371 [1)]
EAC Conformity	-	Eurasia conformity for all G..A variants	
UL, cUL	UL60730 http://ul.com/database		

Environmental compatibility
The product environmental CE1E4613en [1)], CE1E4614en [1)] and A6V101083254en [1)] and A5W00030347 contain data on environmentally compatible product design and assessments (RoHS compliance, materials composition, packaging, environmental benefit, disposal).

Dimensions / Weight		
Weight (w/o packaging)	GPC161.1A/RW-MO	0.55 kg
	GMA161.1A/MO	1.4 kg
	GCA161.1A/MO	2.2 kg
Dimensions (w/o bus module)	GPC161.1A/RW-MO	100 x 300 x 67,5 mm
	GMA161.1A/MO	81 x 192 x 63 mm
	GCA161.1A/MO	100 x 300 x 67.5 mm
Suitable drive shafts	GPC161.1A/RW-MO (round / square shaft)	6.0…11 mm / 8.0...15 mm
	GMA161.1A/MO (round / square shaft)	6.4…20.5 mm / 6.4...13 mm
	GCA161.1A/MO (round / square shaft)	8.0…25.6 mm / 6.0...18 mm
	Min. drive shaft length	20 mm

[1] The documents can be downloaded from http://siemens.com/bt/download

Diagrams

Internal diagrams

The damper actuators are supplied with a prewired connecting and communication cable. All interconnected devices must be connected to the same G0.

Core desig.	Core color	Terminal code	Description
1	red (RD)	G	System potential AC 24 V ~ / DC 24 V ⎓
2	black (BK)	G0	System neutral
6	violet (VT)	REF	Reference (Modbus RTU)
8	grey (GY)	+	Bus + (Modbus RTU)
9	pink (PK)	-	Bus - (Modbus RTU)

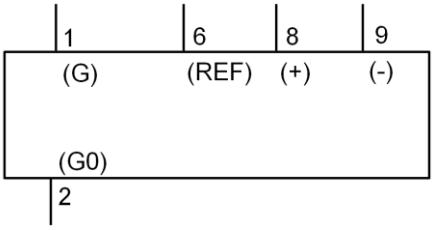

NOTE	
!	Operating voltage on terminals G and G0 must comply with the requirements for SELV or PELV. Safety transformers featuring twofold insulation must be used as per EN 61558; they must be designed for 100 % duty cycle.

Dimensions

GMA161.1A/MO

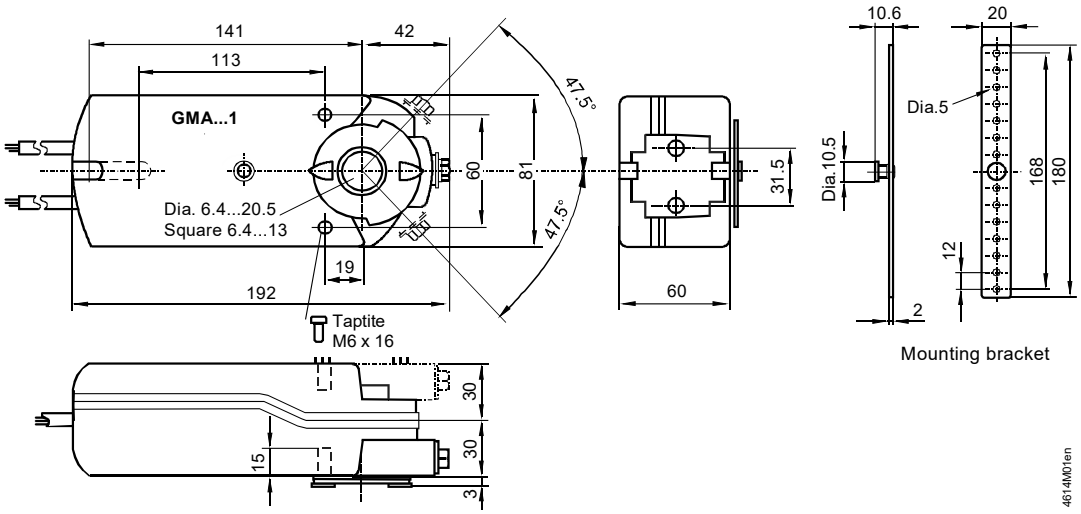

GCA161.1A/MO

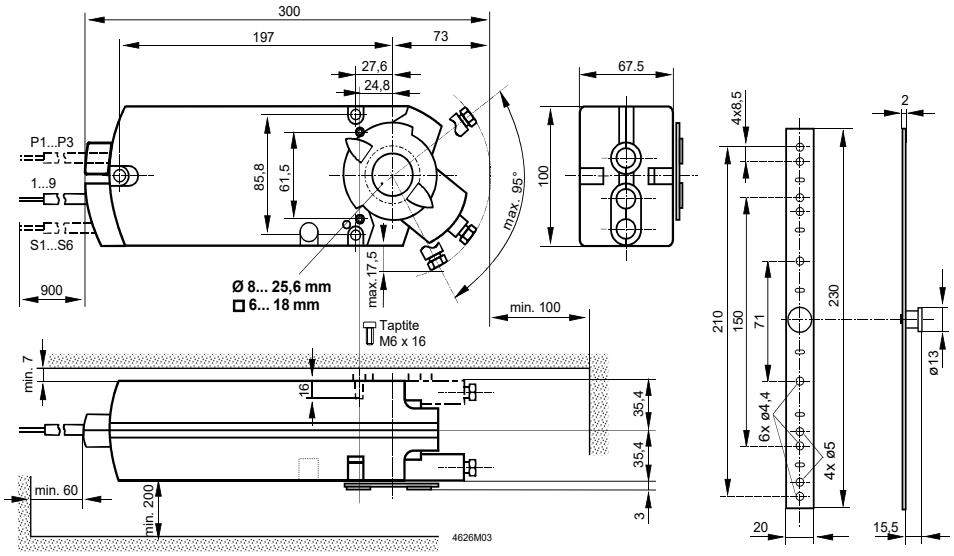

GPC161.1A/RW-MO

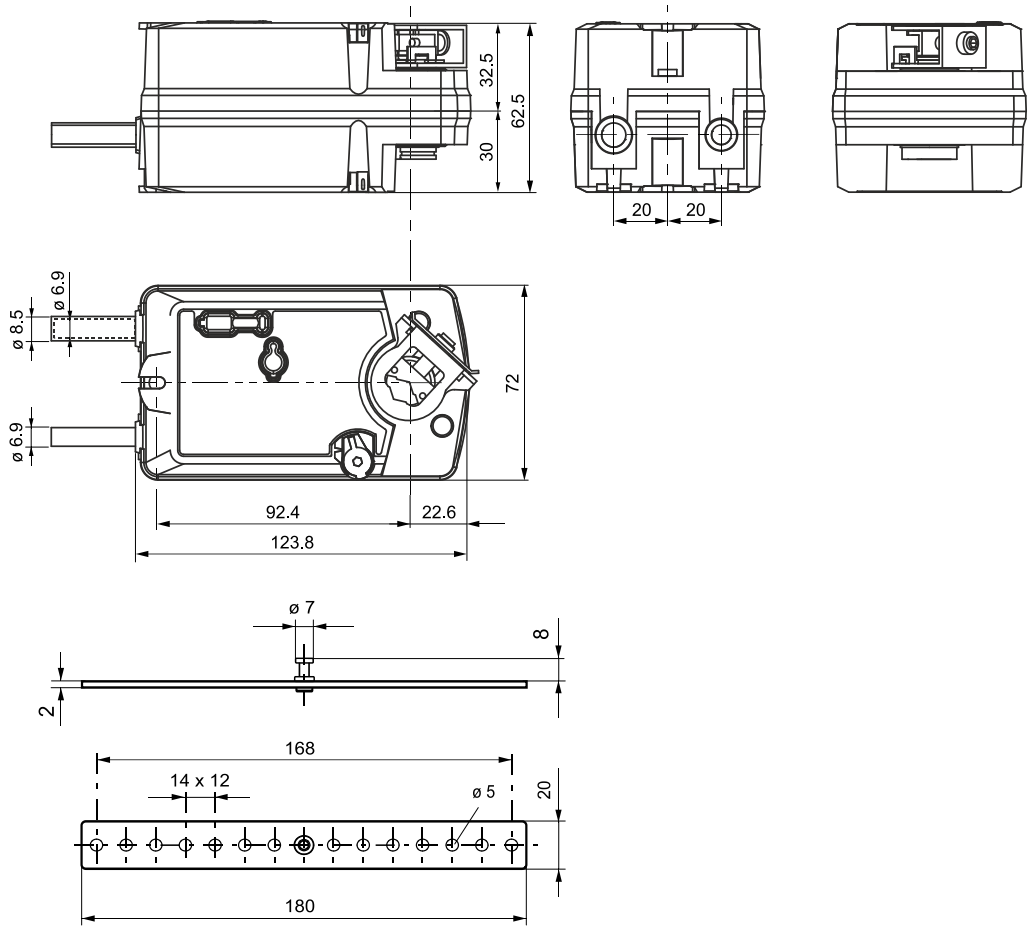

External Modbus Interface

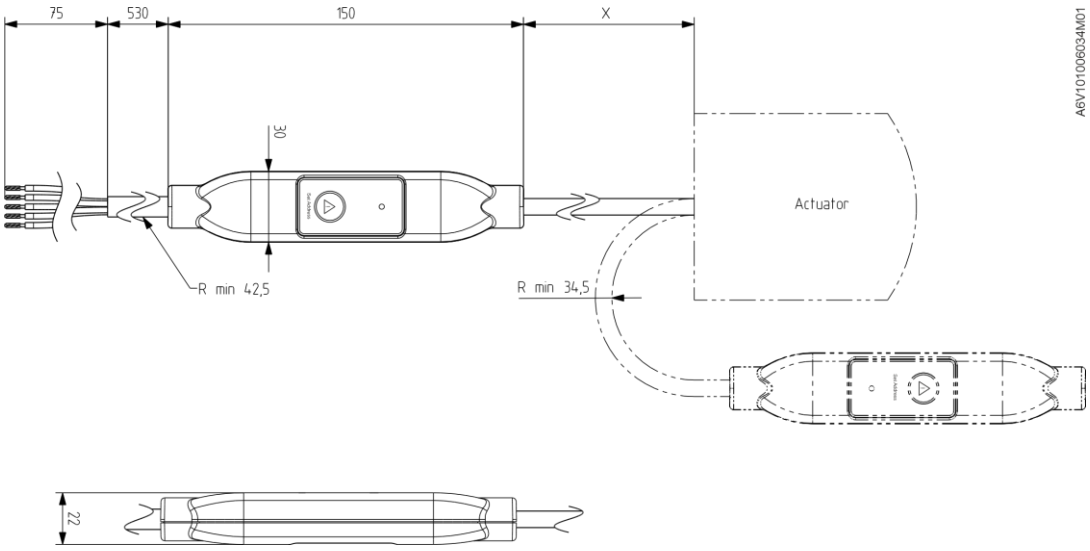

X = 220 mm

Dimensions in mm

Issued by
Siemens Switzerland Ltd
Smart Infrastructure
Global Headquarters
Theilerstrasse 1a
CH-6300 Zug
Tel. +41 58-724 24 24
www.siemens.com/buildingtechnologies

© Siemens Switzerland Ltd, 2017 – 2025
Technical specifications and availability subject to change without notice.

Dokument-ID A6V101037201_en--_f
Ausgabe 2025-11-07